FLUKE

2590FTS
Field Test Set

Service Manual

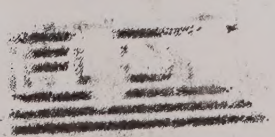

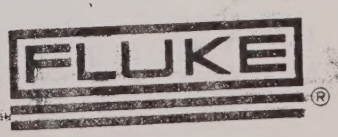

©1984, John Fluke Mfg. Co., Inc.

2190F TS
Field Test Set

Service Manual

FLUKE

TABLE OF CONTENTS

SECTION	TITLE	PAGE
-	List of Illustrations	iii
-	List of Tables	iv
1	**INTRODUCTION AND SPECIFICATIONS**	1-1
	1-1. INTRODUCTION	1-1
	1-5. Temperature Section	1-1
	1-10. Audio Frequency Section	1-2
	1-13. Multimeter Section	1-2
	1-16. DC Voltage/Current Section	1-2
	1-19. Timer Section	1-2
	1-21. Power Supply	1-3
	1-23. SPECIFICATIONS	1-3
	1-24. Thermometer	1-4
	1-24. Calibrator	1-6
	1-24. Audio Frequency Counter	1-6
	1-24. Audio Frequency Sources	1-6
	1-24. Multimeter	1-7
	1-24. DC Voltage Sources	1-11
	1-24. Current Source	1-11
	1-24. Relay Timer	1-11
	1-24. General	1-12
	1-24. Environmental	1-12
2	**OPERATING INSTRUCTIONS**	2-1
	2-1. INTRODUCTION	2-1
	2-5. SHIPPING INFORMATION	2-2
	2-8. OPERATING NOTES	2-3
	2-9. Multimeter Section	2-3
	2-50. Temperature Section	2-10
	2-71. Audio Frequency Section	2-13
	2-93. DC Voltage Sources	2-15
	2-98. DC Current Source	2-15
	2-101. Logic Timer	2-16
	2-113. Making Power Input Connections	2-19

(continued on page ii)

SECTION	TITLE	PAGE
3	**THEORY OF OPERATION**	3-1
	3-1. INTRODUCTION	3-1
	3-3. OVERALL FUNCTIONAL DESCRIPTION	3-1
	3-14. BLOCK DIAGRAM ANALYSIS	3-3
	3-15. Introduction	3-3
	3-17. Temperature Section	3-3
	3-19. Thermometer Section	3-3
	3-22. Digital Section	3-3
	3-28. Analog Secton	3-4
	3-36. The Measurement Routine	3-6
	3-50. Calibrator	3-8
	3-54. Frequency Counter	3-10
	3-63. Frequency Sources	3-13
	3-70. Multimeter	3-14
	3-84. DC Voltage Sources	3-18
	3-90. Current Source	3-18
	3-95. Relay Timer	3-19
	3-101. Delay Pick-up Timing	3-19
	3-104. Delay Drop-out Timing	3-21
	3-108. Power Supplies	3-23
4	**MAINTENANCE**	4-1
	4-1. INTRODUCTION	4-1
	4-4. GENERAL MAINTENANCE	4-3
	4-17. PERFORMANCE TEST	4-6
	4-19. Temperature Section Verification	4-6
	4-21. Thermocouple Calibration Output Verification	4-17
	4-22. Multimeter Verification	4-18
	4-29. Frequency Counter Verification	4-22
	4-30. Frequency Source Verification	4-23
	4-31. DC Voltage Source Verification	4-24
	4-32. DC Current Source Verification	4-25
	4-33. Relay Timer Verification	4-26
	4-34. CALIBRATION	4-28
	4-36. Multimeter Volts Calibration	4-28
	4-37. Frequency Counter Calibration	4-30
	4-38. Frequency Source Calibration	4-31
	4-39. Thermometer Calibration	4-33
	4-40. Thermocouple Input Module Cal	4-35
	4-41. Ref. Junction Resistor Selection	4-36
	4-42. Relay Timer Calibration	4-38
	4-43. TROUBLESHOOTING	4-39
5	**LIST OF REPLACEABLE PARTS**	5-1
6	**GENERAL INFORMATION**	6-1
7	**SCHEMATIC DIAGRAMS**	7-1

LIST OF ILLISTRATIONS

FIGURE	TITLE	PAGE
	Front Panel	v
2-1	Relay Timer Hookup for Pneumatic Relays	2-18
2-2	Relay Timer Hookup for Solid State Relays	2-18
2-3	Power Input Connection	2-20
3-1	Thermometer A/D - Simplified Circuit Diagram	3-5
3-2	Thermometer A/D Control Signals	3-7
3-3	T/C Calibrator - Simplified Circuit Diagram	3-9
3-4	Frequency Counter - Simplified Circuit Diagram	3-11
3-5	Multimeter - Simplified Circuit Diagram	3-15
3-6	Multimeter Input Signal Conditioners	3-17
3-7	Relay Timer (Delay Pick Up Mode)	3-20
3-8	Relay Timer (Delay Drop Out Mode)	3-22
4-1	Equipt. Connections for Ambient or Ice Point Test	4-9
4-2	Calibrator Output Verification	4-17
4-3	Main Circuit Board Test Point / Cal Locations	4-29
4-4	Thermometer A/D Calibration	4-33
4-5	Thermocouple Input Module Calibration	4-35
4-6	Reference Junction Resistor Selection	4-37
4-7	Main Circuit Board Test Point/CAL Locations	4-40

LIST OF TABLES

TABLE	TITLE	PAGE
1-1	Specifications	1-5
4-1	Required Test Equipment	4-2
4-2	Performance Test Values	4-10
4-3	Thermocouple Reference Tables	4-11
4-4	Decimal Point Location	4-18
4-5	Resistance/Conductance Test	4-19
4-6	DC Voltage Test	4-20
4-7	AC Voltage Test	4-21
4-8	DC mA Test	4-21
4-9	Reference Junction Bias Resistor Values	4-36

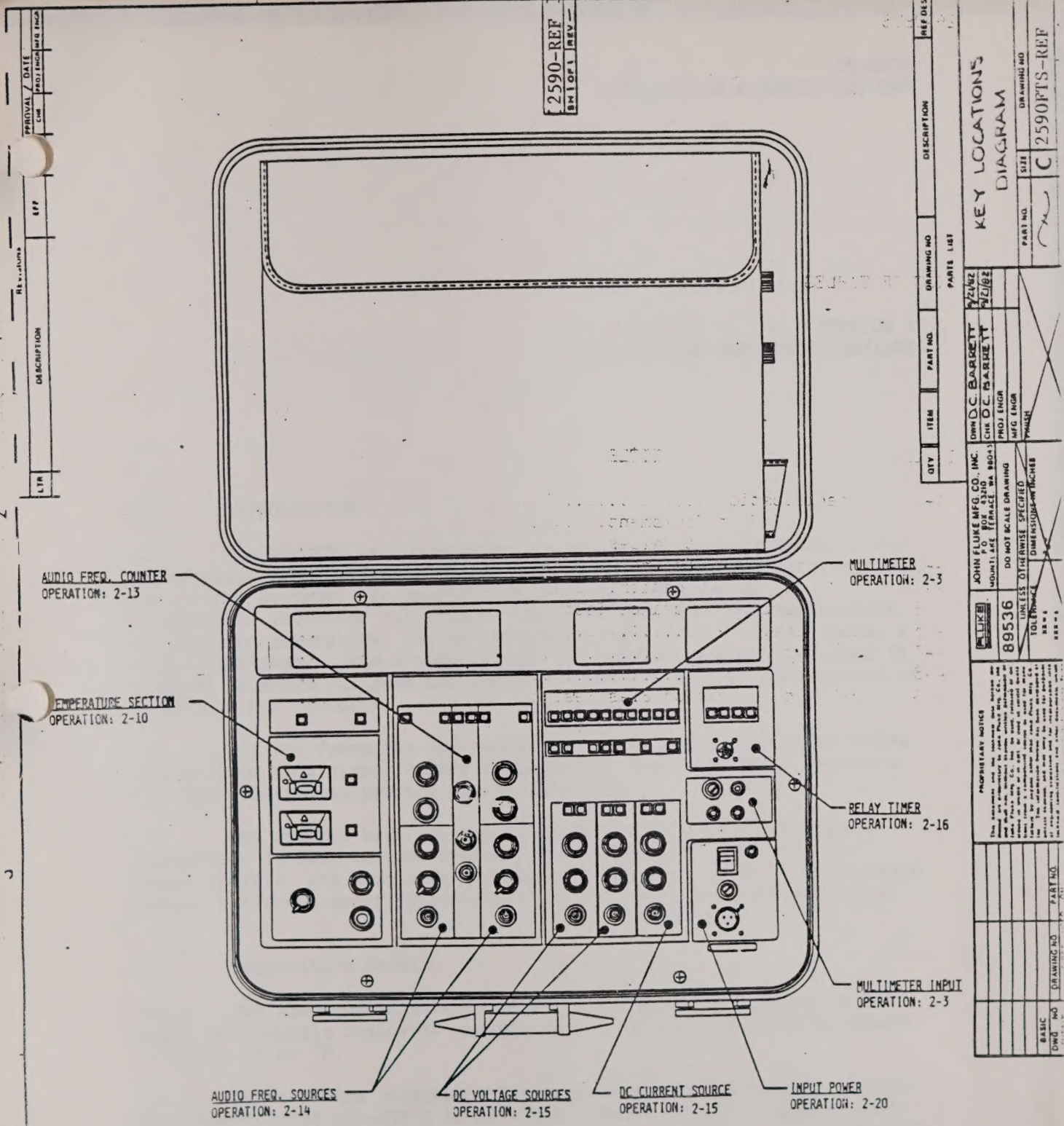

NOTES:

1. INTRODUCTION TO INSTRUMENT: 1-1
2. KEY LOCATIONS REFERENCED BY SECTION/PAGE NUMBER.

SECTION 1
INTRODUCTION AND SPECIFICATIONS

1-1. INTRODUCTION

1-2. The 2590FTS is a portable, integrated test set designed specifically for field testing and troubleshooting of turbine electrical and control systems. It consists of a digital thermometer, a thermocouple indicator calibration source, a digital frequency counter, two function generators, two dc voltage sources, a dc current source, a digital multimeter, and a logic timer. The entire package is housed in a rugged aluminum suitcase and operates from a single dc power source of between 20 and 34 volts.

1-3. All the functions can operate simultaneously without switching hookup leads thus significantly reducing the number of leads necessary and time required to perform maintenance tasks.

1-4. The 2590FTS test set can be used to simulate engine sensory inputs to a turbine control system. The 2590FTS test set then can start, operate, and shut down the control system in a static calibration mode or perform a verification function in an engine operational mode.

1-5. Temperature Section

1-6. The thermometer section of the 2590FTS is a microprocessor based thermocouple indicator capable of precise temperature measurement in either $^{\circ}C$ or $^{\circ}F$.

1-7. Eight switch selectable linearization programs provide a total measurement range of $-252^{\circ}C$ to $2471^{\circ}C$. Resolution is 0.1 degree below 2000° and 1 degree at 2000° and above. (Refer to Table 1-1 for range and accuracy information for each thermocouple type)

1-8. Electronic cold junction compensation is provided at each of two isolated thermocouple inputs, eliminating the need for external ice point reference baths.

1-9. The thermocouple calibration source simulates any of the eight thermocouple types available on the 2590FTS thermometer section. This section operates together with the thermometer to provide a convenient means of accurately calibrating external indicators.

1-10. **Audio Frequency Section**

1-11. The frequency counter section accurately measures sine or square wave inputs over a frequency range of 25 Hz to 100 kHz with 1 Hz resolution. This section also features adjustable input sensitivity and automatic frequency overrange indication.

1-12. The two frequency sources are identical and provide sine and square wave functions over a frequency range of 25 Hz to 15 kHz. Output amplitude is adjustable from 0 to 20V RMS into a maximum load of 600 ohms, with outputs protected against accidental overloads or short circuiting. An adjustable dc offset of 0 to ± 18 volts is also provided.

1-13. **Multimeter Section**

1-14. This section of the 2590FTS is a 3 1/2 digit multimeter capable of measuring dc to 1000 volts and 2000 mA, true RMS ac to 750V and 2000 mA, resistance to 20 Mohm, and conductance to 2 mSiemens.

1-15. Multimeter input select switches are also provided allowing the operator to select any of the internal sources, either of two external frequency inputs, or any external voltage, current, or resistance.

1-16. **DC Voltage/Current Section**

1-17. The two voltage sources are identical and provide 0-10V dc on two ranges. Maximum load current is 400 mA, with output protected against accidental overloads or short circuiting. Source impedance to the output connector is less than .04 ohm.

1-18. The current source provides 0 to 100 mA on two ranges. Maximum compliance voltage is +28V dc.

1-19. **Timer Section**

1-20. The logic timer section of the 2590FTS has three operating modes: Stopwatch, pulse, and cycle. The pulse mode times the duration of a single event such as the time a relay remains closed. The cycle mode times from one event to another, as from one momentary contact closure to another. Either mode permits timing relay contacts or positive and negative TTL levels. The logic timer is capable of measuring event times up to 1999.9 seconds.

1-21. **Power Supply**

1-22. Power input conditioning is provided by a single switching mode preregulator. This section supplies a regulated 12 volts dc to each of four driven inverters. The four inverters provide a total of 8 isolated supplies to the various functional subsections.

1-23. **SPECIFICATIONS**

1-24. Specifications for the 2590FTS are shown in Table 1-1.

1-25. **MANUALS**

1-26. The 2590FTS has two manuals to support it: the Operater Manual and the Service Manual. The Operater Manual is included with the 2590FTS. The Service Manual is an available accessory. The Service Manual covers General Maintanence, Calibration Procedures, Therory of Operation, Schematics and Parts List.

Table 1-1. 2590FTS Specifications

Thermometer

DISPLAY	$^{\circ}$F or $^{\circ}$C, switch selectable, seven segment liquid crystal
RESOLUTION	0.1° below 2000° F or C, 1° above 2000° F or C, autoranging
MEASUREMENT METHOD	Dual slope integration, under microcomputer control. 100 msec integration period, three readings per second.
LINEARIZATION TECHNIQUE	Computer algorithm, 4th order curve fit. Eight switch selectable linearizations: J, K, T, E, R, S, B, C.

NOTE

"C" is not an ISA/ANSI thermocouple designation. C is used for convenience to represent Tungsten -5% Rhenium versus Tungsten- 26% Rhenium alloy.

TEMPERATURE COEFFICIENT	< 15 ppm/$^{\circ}$C from 25 $^{\circ}$C
STABILITY	< 175 ppm in 90 days, 200 ppm/year
MAX. COMMON MODE VOLTAGE	350V dc or 250V ac RMS
ZERO DRIFT	None, automatic zero correction.
INPUT CONNECTION	2 wire, isolated, on screw terminal isothermal block. Two switch selectable inputs.
INPUT IMPEDANCE	100 Mohm at dc
MAX SOURCE IMPEDANCE	2 kilohm
OVERRANGE INDICATION	Positive or negative full scale display (+ O.L), depending upon polarity of overrange input.
OPEN CIRCUIT DETECTION	A source impedance of 2 kilohm or more causes a display of "O.C".
ACCURACY	See adjacent table "Thermometer Accuracy Specifications"

THERMOMETR ACCURARY SPECIFICATIONS

T/C TYPE	MAXIMUM ERROR * ± DEGREES C: APPLICABLE PORTION OF TEMP. RANGE, °C	AT CAL.	90 DAYS 20°C to 30°C	1 YEAR 15°C to 35°C	± DEGREES F: Application Portion OF TEMP. RANGE, °F	AT CAL.	90 DAYS 68°F to 86°F	1 YEAR 59°F to 95°F
J	-128 to 0 0 to 900	0.18 0.18	0.19 0.31	0.21 0.36	-198 to 32 32 to 1652	0.20 0.20	0.20 0.47	0.26 0.58
K	-132 to 0 0 to 1350	0.18 0.18	0.19 0.39	0.21 0.47	-206 to 32 32 to 2462	0.30 0.30	0.33 0.72	0.37 0.87
T	-243 to 0 0 to 400	0.18 0.18	0.20 0.22	0.22 0.25	-405 to 32 32 to 752	0.30 0.30	0.35 0.41	0.39 0.46
E	-252 to 0 0 to 1000	0.18 0.18	0.20 0.33	0.22 0.39	-422 to 32 32 to 1832	0.30 0.30	0.35 0.61	0.40 0.72
R	0 to 1708	0.31	0.59	0.70	32 to 3106	0.47	1.01	1.20
S	0 to 1685	0.22	0.50	0.60	32 to 3065	0.38	0.92	1.10
B	420 to 1815	0.21	0.52	0.62	788 to 3364	0.37	0.95	1.15
C	0 to 2471	0.18	0.60	0.75	32 to 4480	0.30	1.11	1.37

* FOR READINGS ABOVE 1999.9 DEGREE C OR DEGREE F ADD ± .5 DEGREES ROUND OFF ERROR

ACCURACY STATEMENT DOES NOT INCLUDE THERMOCOUPLE ERRORS

TABLE 1-1

Table 1-1. 2590FTS Specifications (continued)

Calibrator

COMPATIBLE TERMOCOUPLE TYPES...	J, K, T, E, R, S, B, C
OUTPUT IMPEDANCE.....	100 ohm
RANGE.....	-10 to +90 mV dc, 25 °C
TEMPERATURE COEFFICIENT.....	< 20 ppm/°C from 25 °C

Frequency Counter

MEASUREMENT RANGE.....	25 Hz to 100 kHz
DISPLAY.....	5-digit liquid crystal with 'Hz'
ACCURACY.....	+ (0.01% + 1 count) 0 - 50 °C
TIMEBASE STABILITY.....	< 10 ppm/year
GATE TIME.....	1 sec
DISPLAY UPDATE TIME.....	1.2 sec
SENSITIVITY.....	Adjustable 75 mV RMS -full scale, 25 Hz to 100 kHz.
MAXIMUM INPUT WITHOUT DAMAGE...	500V dc or peak ac
INPUT IMPEDANCE.....	10 Mohm for inputs -1 to +1 volt, 100 Kohm for inputs above + 1 volt
OVERFLOW.....	Display reads 0.0.0.0.0

Frequency Sources

FUNCTION.....	Sine, Square; switch selectable
FREQUENCY RANGE.....	25 Hz to 15 kHz
FREQUENCY TEMP COEFF.....	< 0.5 %/°C
AMPLITUDE.....	0 to 20V RMS into 600 ohms
DISTORTION (SINE WAVE).....	1% from 1 kHz to 10 kHz
OUTPUT IMPEDANCE.....	Less than 1 ohm
DC OFFSET.....	-18V to +18V variable

Table 1-1. 2590FTS Specification (continued)

Multimeter

DISPLAY..... 3 1/2 digit liquid crystal, auto polarity and decimal point.

DC VOLTS (Multimeter)

Accuracy, 1-year..... ± (0.1% of reading + 1 digit)

Input Impedance..... 10 Mohm

Overvoltage Protection. 1000V dc or peak ac

Response Time..... 1 sec

AC VOLTS (Multimeter)

Accuracy, 1 Year..... see table below

Crest Factor Range..... 1.0 to 3.0

Input Impedance..... 10 Mohm/100 pf

Overload Protection.... 750V RMS or 1000V peak

Not to exceed the volt-hertz product of 10^7 (except for 10 seconds maximum on 200 mV, 2V range)

Response Time..... 2 seconds maximum within a range

AC Voltage Accuracy

RANGE	45 Hz to 1 kHz	1 kHz to 10 kHz	10 kHz to 20 kHz
200mV	±(0.8% of READING + 2 DIGITS)		±(1.0% of READING + 2 DIGITS)
2V			
20V			
200V			
750V		NA	NA

Table 1-1. 2590FTS Specifications (continued)

DC CURRENT (Multimeter)

Accuracy..... ± (0.3% of reading + 1 digit)

Burden Voltage..... 0.3V max, 200 uA thru 200 mA ranges, 1.5V max, 2000 mA range

Overload Protection.... 2A/250V external fuse in series with an internal 3A/600V fuse

AC CURRENT (Multimeter)

Accuracy, 1 year..... see table below

Burden Voltage..... 0.3V, 200 uA to 200 mA ranges, 1.5V, 2000 mA range

Overload Protection.... 2A/250V external fuse in series with an internal 3A/600V fuse

Crest Factor Range..... 1.0 to 3.0

Response Time..... 2 seconds maximum within a range

AC Current Accuracy

<table>
<tr><th>RANGE</th><th>45 Hz to 2 kHz</th><th>2 kHz to 10 kHz</th><th>10 kHz to 20 kHz</th></tr>
<tr><td>200uA</td><td rowspan="4">±(1% of READING + 2 DIGITS)</td><td rowspan="3"></td><td rowspan="3">±(2% OF READING + 2 DIGITS)</td></tr>
<tr><td>2mA</td></tr>
<tr><td>20mA</td></tr>
<tr><td>200mA</td><td rowspan="2"></td><td rowspan="2"></td></tr>
<tr><td>2000mA</td><td>NA</td><td>NA</td></tr>
</table>

Table 1-1. 2590FTS Specification (continued)

RESISTANCE (Multimeter)

Accuracy, 1 year..... see table below

Overload Protection... 300v dc/ac RMS, all ranges

Open Circuit Voltage.. less than 3.5V, all ranges

Response Time..... 1 second, 200 ohm thru 20 kohm ranges. 4 seconds, 200 kohm and 20 Mohm ranges.

Resistance Accuracy

RANGE	ACCURACY	FULL SCALE VOLTAGE	MAX TEST CURRENT
200 ohm *	±(0.2% OF READING + 1 DIGIT)	0.025V	1.3 mA
2 kohm		1.0V	1.3 mA
20 kohm		< 0.25V	10.0 uA
200 kohm		1.0V	35.0 uA
2000 kohm	±(0.5% OF READING + 1 DIGIT)	< 0.25V	0.10 uA
20 Mohm		1.5V	0.35 uA

* For specified accuracy in the 200 ohm range, any residual resistance must be zeroed: record the measurement, then subtract from that the reading obtained with the input leads shorted together.

Table 1-1. 2590FTS Specifications (continued)

CONDUCTANCE (Multimeter)

Accuracy, 1 year..... see table below

Overload Protection..... 300V dc / ac RMS on all ranges

Conductance Accuracy

RANGE	ACCURACY	FULL SCALE VOLTAGE	MAX TEST CURRENT
2 mS	± (0.2% OF READING + 1 DIGIT)	3.5V	1.3 mA
20 uS		1V	10.0 uA
200 nS	± (1% OF READING + 10 DIGITS)	1V	0.10 uA

Table 1-1. 2590FTS Specification (continued)

DC Voltage Sources

OUTPUT	2 Ranges; 0 to 1V, 0 to 10V
OUTPUT IMPEDANCE	< .040 ohm to the output connector
TEMPERATURE COEFFICIENT	≤ (20 uV + 250 ppm)/°C
MAX. LOAD CURRENT	400 mA
OUTPUT PROTECTION	Protected against continuous short circuit.
CURRENT LIMIT POINT	~ 600 mA

Current Source

OUTPUT	2 Ranges; 0 to 1000 uA, 0 to 100 mA
TEMPERATURE COEFFICIENT	≤ 200 ppm/°C
COMPLIANCE VOLTAGE	+28V max

Logic Timer

RANGE	1999.9 seconds
MODES	Pulse, Cycle, Stopwatch
DISPLAY	4-1/2 digit liquid crystal with decimal point.
ACCURACY	± 0.01% + 1 count 0 to 50 °C
TEMPERATURE COEFFECIENT	≤ 0.1 ppm/°C
TIMEBASE STABILITY	≤ 10 ppm/year
OVERFLOW	Display reads 0.0.0.0.0

Table 1-1. 2590FTS Specifications (continued)

General Specifications

POWER	20 to 34V dc, 3 Amps max
WARM UP TIME	5 minutes
DIMENSIONS	15.4 cm H x 33.0 cm W x 45.7 cm L (6.08 in H x 13 in W x 18 in L)
WEIGHT	Approximately 8.6 kg. (19 lbs.)

Environmental

STORAGE TEMPERATURE	-40 °C to 75 °C
OPERATING TEMPERATURE	0 to 50 °C
RELATIVE HUMIDITY	0 to 80% up to 50 °C (non-condensing)
SHOCK AND VIBRATION	Meets MIL-T-2800 Specifications

SECTION 2
OPERATING INSTRUCTIONS

2-1. INTRODUCTION

2-2. The 2590FTS operator panel is arranged into the functional subsections: multimeter, thermometer, frequency sources, dc voltage sources, dc current cource, and logic timer. Four displays allow for simultaneous measurement of thermometer, frequency counter, multimeter, and logic timer. Adjustments or measurements made on one section will have no effect on any of the other sectons.

2-3. The following paragraphs describe operation of each of these sections. The multimeter is covered first as this section is used to monitor most of the other sections.

NOTE

Instructions for making power input connections are covered in paragraphs at the end of Section 2, under Making Power Connections.

2-4. There are three triangular shaped caution symbols located on the instrument front panel in the temperature section; one on each of the thermocouple input assemblies and one next to the T/C signal select pushbutton. Please refer to the cautions under Temperature Measurement and Calibrator Operation (in later subsections), marked by these symbols in the margin.

WARNING

DO NOT TOUCH TERMINALS WHEN HIGH VOLTAGES ARE PRESENT. ALL SECTIONS OF THE 2590FTS AND ASSOCIATED INPUTS AND OUTPUTS ARE ELECTRICALLY ISOLATED FROM EACH OTHER. UP TO 350V DC OR PEAK AC MAY BE PRESENT BETWEEN TERMINALS IN DIFFERENT SECTIONS OR BETWEEN ANY TERMINAL AND THE INSTRUMENT CASE.

2-5 SHIPPING INFORMATION

2-6. The 2590FTS Electrical Test Set is packaged and shipped in a foam-packed container. Upon receipt of the instrument, a thorough inspection should be made to reveal any possible shipping damage. Special instructions for inspection and claims are included in the shipping carton.

2-7. If reshipment of the instrument is necessary, the original container should be used. If the original container is not available, a new container can be obtained from the John Fluke Mfg. Co., Inc. Please reference the instrument's model number when requesting a new shipping container.

2-8. OPERATING NOTES

2-9. Multimeter Section

2-10. MULTIMETER DISPLAY

2-11. The multimeter display is a 3 1/2 digit LCD providing 1,999 counts of resolution. A decimal point, polarity indicator, and overrange indicator are also included. Decimal point positioning is automatic and is determined by the selected measurement range.

2-12. Polarity sensing is also automatic, and is valid for dc voltage and current measurements. A minus sign indicates that the input voltage or current is negative with respect to multimeter input common. Voltage or current inputs that are positive with respect to common are indicated by the absence of a minus sign.

NOTE

Two other conditions may cause the negative sign to be displayed, neither of which indicates a valid display. Please refer to paragraphs 2-13 (Overrange) and 2-46 (Resistance).

2-13. OVERRANGE

2-14. An overrange condition is indicated by a "1" followed by three blank digits. (A decimal point may also be present, depending upon the range selected.) An overrange display indicates that the unknown input (voltage, current, resistance, or conductance) is of sufficient amplitude to require that a higher range be selected, and does not necessarily mean that the input will damage the instrument. (Refer to multimeter specifications for dc volts or ac volts for overvoltage limits).

2-15. When measuring resistance, the overrange indication is displayed to indicate an open input condition or an input resistance greater than the selected range can measure.

NOTE

When the instrument comes out of an overrange condition the minus sign may flash momentarily (most likely seen when measuring resistance).

2-16. MEASUREMENT UNITS

2-17. There are no measurement unit indicators on the multimeter display. To determine units of measure note the selected function and range. For example if the volt (V) function is selected, and the 200 mV range is selected, and the unknown input is within the selected range; the display will represent a voltage of between 000.0 and ± 199.9 mV.

2-18. FUNCTION SWITCHES

2-19. The first four pushbutton switches on the left, directly below the multimeter display, are used to select the desired measurement function.

2-20. The leftmost switch, marked AC/DC, is used in conjunction with the "V" and "mA" switches to determine the type of voltage or current to be measured. If the AC/DC switch is in the OUT position the multimeter is configured for dc voltage or current measurement. If the switch is depressed, only the ac components of the input signal will be measured.

2-21. The V, mA, and Kohm/S switches select the voltage, current or resistance/conductance functions. These three pushbuttons are interlocked. Depressing one pushbutton will cause either of the other two to return to the out position.

2-22. RANGE SWITCHES

2-23. The next six pushbuttons are used to select the desired measurement range. They provide 5 ranges of ac/dc voltage and current, 6 ranges of resistance, and three ranges of conductance. They are also interlocked. As indicated on the operator panel, any one of the three conductance ranges may be selected by depressing the two appropriate pushbuttons simultaneously.

2-24. MULTIMETER INPUT SELECT SWITCHES

2-25. The EXT/INT pushbutton is used to connect either the multimeter external input terminals or the internal select switches to the multimeter input. The EXT/INT pushbutton must be in the OUT position to connect the FREQ, EXT FREQ, DC VOLTS OUT, or DC mA OUT to the multimeter.

2-26. Directly below the function and range switches there is a group of seven pushbutton switches. These switches are used to select the desired input to the multimeter.

2-27. The pushbuttons marked FREQ 1 and 2 connect the outputs of the internal frequency sources to the multimeter input. Both waveform amplitude and dc offset level can be measured by proper multimeter function selection.

2-28. The EXT FREQ pushbutton is used to connect the selected external frequency input to the multimeter input.

2-29. The DC VOLTS OUT 1 and 2 pushbuttons are used to connect either one of the two internal dc voltage source outputs to the multimeter input.

NOTE

The regulation specifications given in Section 1 for the DC Voltage Sources apply to voltage levels present at the output terminals, which is where multimeter measurements are made. If greater measurement accuracy is required (as may be the case if output current is near the maximum specified and the test leads to the load are long) it is suggested that the voltage measurements be made at the load using the multimeter external input.

2-30. The DC mA OUT pushbutton is used to connect the output of the current source to the multimeter mA input. When this switch is depressed the multimeter is placed in series with the internal compliance voltage source and the current source output high terminal. If DC mA OUT is NOT selected the internal compliance voltage source is connected directly to the current source output high terminal.

NOTE

In order for current to flow a load must be placed between the current source HI and LO output terminals.

2-31. The EXT/INT pushbutton is used to connect either the multimeter external input terminals or the internal select switches to the multimeter input. With the EXT/INT pushbutton pushed in the multimeter may be used to measure any external voltage, current, or resistance source that does not exceed specified input limits.

2-32. MULTIMETER EXTERNAL INPUT SECTION

2-33. This section consists of three banana/binding post connectors and a fuse. Voltage, resistance, and conductance inputs are connected between the V/Kohm/S and common terminals. Current inputs are connected between the mA and common terminals. The fuse is to protect the current input circuitry from damage if a current input of greater than 2 amps is applied.

2-34. VOLTAGE MEASUREMENTS

2-35. To make voltage measurements, use the following procedure:

CAUTION

THE VOLTAGE SOURCE SHOULD NOT EXCEED 1000V DC OR 750V RMS AC OR DAMAGE TO THE INSTRUMENT MAY RESULT.

1. Select the ac or dc volts function.
2. Select the desired measurement range.
3. Select the desired voltage source (any of the internal sources, or the external binding posts).
4. The unknown voltage should now be displayed.

2-36. Under most measurement conditions, source loading errors should not be a problem. If source impedance is 10 kohm or less, the error will be less than 0.1%. Loading error can be calculated using the following formulas:

1. For dc voltage measurements:

$$\text{Error in \%} = 100 \times RS - (RS + 10^7)$$

Where: RS = source resistance in ohms

2. For ac voltage measurements:

$$\text{Error in \%} = \frac{100 \times ZS}{RS + ZIN}$$

Where: ZIN = Effective Input Impedance
ZS = Source Impedance
RS = Source Resistance

ZIN may be computed using:

$$ZIN = \frac{10^7}{\sqrt{1 + (2 \cdot PI \cdot F \cdot RIN \cdot C)^2}}$$

Where: ZIN = Effective Input Impedance
RIN = 10^7 ohms
C = 100×10^{-12} Farads
F = Frequency in Hz
PI = 3.14159

2-37. Composite ac/dc waveforms can also be measured. Measure the ac component of the waveform using the ac function of the multimeter. Measure the dc component using the dc function. The total RMS value of the waveform is:

$$\text{RMS Total} = \sqrt{(\text{ac component})^2 + (\text{dc component})^2}$$

2-38. CURRENT MEASUREMENTS

2-39. To make current measurements, use the following procedure:

CAUTION

**INPUT CURRENT SHOULD NOT EXCEED 2 AMPS.
OPEN CIRCUIT VOLTAGE SHOULD NOT EXCEED
250V DC or 250V PEAK AC.**

1. Select ac or dc current function.

2. Select desired measurement range.

3. Connect the multimeter into the circuit to be tested. The unknown current should now be displayed.

2-40. If the current source being measured is unregulated, or if the resistance of the multimeter current shunt and fuse represents a significant part (1/1000 or more) of the source resistance, then burden voltage errors may need to be considered. Burden voltage is the voltage drop at the multimeter's terminals when measuring current (that voltage across the multimeter's current shunt and protective fuses).

2-41. Burden voltage error can be calculated using the following formulas:

1. $$EB = \frac{100 \times \text{READING} \times EB\ (FS)}{\text{FULL SCALE}}$$

   Where: EB = Burden voltage (calculated)
   READING = Displayed Current Reading
   FULL SCALE = Range Selected
   EB (FS) = Specified full scale burden voltage for range selected.
   (Refer to multimeter dc or ac current specifications for this value)

2. $$\% \text{ error} = 100 \times \frac{EB}{ES-EB}$$

   Where: EB = Burden Voltage (Calculated)
   ES = Source Voltage

3. Error in AMPS = $\frac{EB \times IM}{ES - EB}$

Where: EB = Burden Voltage (calculated)
ES = Source Voltage
IM = Measured current in amps

2-42. An example of burden voltage calculations follows. Assume these conditions are given: ES = 14V, RL = 9 ohm, IM = 1.497A

1. EB = $\frac{100 \times 1497 \times 0.9}{2000}$ (from spec.)

= 74.9% of 0.9 - 0.674V

2. % Error = 100 X $\frac{.674}{14 - .674}$ = 5.06%

3. Error in amps = $\frac{.674 \times 1.497}{14 - .674}$ = 0.074A

Displayed Current = 1.497A
Actual Current = 1.571A

2-43. Resistance Measurements

2-44. To make resistance measurements, use the following procedure:

1. Select the Resistance function.

2. Select the desired measurement range. The multimeter should display an open circuit condition ("1" followed by three blank digits), with no load connected.

3. Connect the unknown resistance to the multimeter external input.

4. The unknown resistance should be displayed.

2-45. When using the 200 ohm range, more accurate measurements can be made if lead resistance is considered. Short the sampling ends of the test leads together and read the lead resistance and subtract this lead resistance from your measurements.

2-46. The 2 kilohm resistance range with a diode symbol beside the range value has a high enough open circuit voltage to turn on silicon junctions. This range can be used to check silicon diodes and transistors. The other ranges will not turn on silicon junctions and so should be used for making in-circuit resistance measurements.

2-47. If you are reading resistance and the minus sign remains on, there is still energy in the circuit under test. The circuitry may still have power applied or a capacitor may still be charged. Reversing the test leads will result in erroneous readings. If there is any doubt about the circuit under test, read the resistance, then reverse the test leads. If a minus sign is displayed in either case, the circuit must be de-energized before accurate resistance measurements can be made.

2-48. CONDUCTANCE MEASUREMENTS

2-49. Conductance is the inverse of resistance and can therefore be computed using the formula S = 1/R.

Where: R = Resistance in ohms
S = Conductance in Siemens

2-50. The three conductance ranges span resistance measurements of 500 ohms to 10,000 Mohms. These ranges allow noise free measurements of inverse function components (such as photo diodes, high value resistors, diode and capacitor leakage characteristics, or transistor beta). Make conductance measurements as follows:

1. Select the Kohm/S function.

2. Select the desired range by depressing the two appropriate pushbuttons simultaneously.

3. Connect the unknown resistance to the multimeter external input terminals.

4. The unknown resistance should be displayed in terms of Siemens.

5. To convert the measurement to ohms, divide the reading into 1.

For example: $\frac{1}{1\text{uS}} = \frac{1}{1 \times 10^{-6}\ \text{S}} = 1 \times 10^{6}$ ohm = 1 Mohm

2-51. Temperature Section

2-52. TEMPERATURE DISPLAY

2-53. The thermometer display is a 4-1/2 digit LCD providing 0.1 degree resolution below 2000°C or °F, and 1 degree resolution from 2000°C or °F and above. The selected temperature scale (either °C or °F) is indicated to the right of the temperature display. A decimal point, polarity indication, overrange indication, and open circuit indication are also provided.

2-54. OVERRANGE

2-55. Overrange is indicated by either -0.L or 0.L, depending upon input polarity. An overrange display indicates that the unknown temperature input is of an amplitude greater than the selected thermocouple range. It does not necessarily mean that the input will damage the instrument. (Refer to Table 1-1 for overvoltage specifications.)

2-56. OPEN CIRCUIT DETECTION

2-57. A source impedance of 2 kohm or greater will cause the thermometer to display 0.C. This informs the operator of a faulty thermocouple or poor input connection.

2-58. TEMPERATURE SCALE SELECTION

2-59. The thermometer will display temperature in either degrees Celsius or degrees Fahrenheit. Scale selection is made using the °F/°C switch located to the far left, below the temperature display. Scale changes can be made at any time, and have no effect on the calibration of the instrument.

2-60. THERMOCOUPLE SELECTION

2-61. The measurement range of the thermometer is determined by the type of thermocouple used as the input device. Any one of eight thermocouple ranges may be selected using the rotary SELECT TYPE T/C switch located below the input modules. Refer to Table 1-1 for thermocouple range information.

NOTE

It is important that the selected range match the type of thermocouple used. Otherwise, all temperature readings will be erroneous.

2-63. THERMOCOUPLE INPUT SELECT

2-64. There are two thermocouple input modules installed in access ports in the thermometer section. The two modules are identical and each provides one set of screw-type input terminals. This allows switch selectable measurement of two temperature sources, by using the two switches located to the right of the input modules.

2-65. Two thermocouple types may also be used. This, however, requires that the operator reselect thermocouple range as well as thermocouple input.

NOTE

The thermocouple input modules have been calibrated to match the specific tester in which they are installed. Measurement errors will result if they are used in another tester without recalibration.

2-66. THERMOCOUPLE SIGNAL SELECT

2-67. Depress the Thermocouple Signal Select pushbutton to enable the CALIBRATION OUTPUT. This connects the output of the internal calibration source to the input terminals of the thermometer. The calibration voltage therefore appears at the screw terminals on the thermocouple input module selected. When measuring temperature, the T/C Signal Select switch should be in the EXTERNAL INPUT (OUT) position. (Refer to a section which follows for detailed instructions on calibrator operation)

2-68. TEMPERATURE MEASURMENT

2-69. To make temperature measurements, use the following procedure:

1. Remove one or both of the T/C input modules.
2. Connect the selected thermocouple(s) to the screw terminal(s) on the input modules.
3. Connect the input modules to the mainframe through the access ports.
4. Set the T/C type select switch to match the thermocouple selected.
5. Select the desired temperature scale using the $^{o}F/^{o}C$ select switch.

CAUTION

THE MAXIMUM VOLTAGE THAT MAY BE CONNECTED BETWEEN ANY TWO THERMOCOUPLE INPUT TERMINALS IS 350V DC OR 250V RMS AC. GREATER VOLTAGE MAY RESULT IN DAMAGE TO THE INSTRUMENT.

6. Expose the thermocouple probe to the unknown temperature to be monitored, within the thermocouple's specified range.

7. The probe temperature will be displayed (in ^{o}F or ^{o}C).

2-70. CALIBRATOR OPERATION

2-71. The calibrator section provides thermocouple simulation outputs of between -10 mV and +90 mV. It is used for calibration of external thermocouple indicators. Connect and operate the calibrator as follows:

1. Remove one of the T/C input modules.

2. Connect a length of the desired thermocouple wire between the T/C input module and the external indicator to be tested. Observe proper polarity.

3. Install the T/C input module in the 2590FTS test set.

4. Select the proper T/C Type on the thermometer.

5. Select the thermocouple input (T/C 1 OR T/C 2) that is connected to the external indicator.

CAUTION

TO PREVENT DAMAGE TO THE INTERNAL CALIBRATOR DO NOT CONNECT HIGH VOLTAGES TO ANY OF THE T/C INPUT TERMINALS WHILE THE T/C SIGNAL SELECT PUSHBUTTON IS IN THE CALIBRATION OUTPUT (DEPRESSED) POSITION.

6. Press the T/C SIGNAL select pushbutton to the CALIBRATION OUTPUT (depressed) position.

7. Select the desired temperature scale.

8. Using the COARSE and FINE adjustments in the CAL/OUTPUT section, adjust the calibrator output for the desired temperature display.

9. Adjust the external indicator so that its reading agrees with the 2590FTS thermometer display.

2-72. Audio Frequency Section

2-73. FREQUENCY COUNTER DISPLAY

2-74. The frequency counter display is a 5 digit LCD providing 100,000 counts of resolution. A measurement units indicator (Hz), and overflow indication are also provided.

2-75. OVERFLOW

2-76. A frequency of 100,000 Hz or greater will cause the display to indicate an overflow condition. The display will show five zeros separated by decimal points (0.0.0.0.0 Hz).

2-77. COUNTER INPUT SELECT

2-78. There are four interlocked counter input select switches located directly below the counter display. These switches are used to connect the desired frequency source to the input of the frequency counter. The operator can choose between the two internal frequency sources or two external frequency inputs.

2-79. TRIGGER LEVEL

2-80. A one turn pot is provided to allow the trigger level of the selected external frequency input to be adjusted. When the pot is in the full counter clockwise position (MIN) the counter will trigger on any signal greater than 75 mV RMS. Turning the pot clockwise increases the trigger level. This allows the user to adjust the trigger level to prevent counting noise on the input signal.

2-81. FREQUENCY MEASUREMENT

2-82. To make frequency measurements, use the following procedure:

CAUTION

INPUT SIGNAL AMPLITUDE SHOULD NOT EXCEED 500V AC PEAK OR 500V DC. ANY AC SIGNALS OF GREATER THAN 100V PEAK SHOULD NOT BE APPLIED FOR LONGER THAN FIVE MINUTES, OR DAMAGE TO THE INSTRUMENT MAY RESULT.

1. Connect the desired frequency source to the frequency counter, using the counter input select switches.

2. The unknown frequency will be displayed.

3. The amplitude of the selected frequency source may be measured using the multimeter, by selecting the proper multimeter input and range.

2-83. FREQUENCY SOURCES

NOTE

The following instructions apply to both frequency sources.

2-84. FUNCTION SELECT

2-85. The sine and square wave output functions are selected using a push-push switch located in the upper corner of the frequency section.

2-86. FREQUENCY ADJUST

2-87. The output frequency is continuously variable from 25 Hz to 15 kHz. One 10-turn coarse and one 10-turn fine adjustment control are provided for this purpose. Clockwise rotation of either control will increase output frequency.

2-88. AMPLITUDE ADJUST

2-89. A single 10-turn control is used for output amplitude adjustment. Clockwise rotation of the control will increase the output amplitude. Adjustment range is from 0 to 20V RMS.

2-90. DC OFFSET

2-91. The output waveform may be superimposed on an adjustable dc offset. The offset is continuously variable between -18V dc and +18V dc.

2-92. The offset control, located directly above the output connector, is a combination push/pull switch and 4-turn potentiometer. Pushing the switch in disables the offset (0V dc offset). When the switch is pulled out position, rotating the offset control in a clockwise or counter-clockwise direction will make the waveform offset more positive or more negative, respectively.

2-93. DC Voltage Sources

NOTE

The following instructions apply to both dc voltage sources.

2-94. RANGE SWITCHES

2-95. Two interlocked pushbutton switches are used to select either of two voltage output ranges. On the lower range, output level is continuously adjustable from 0 to 1V. The upper range provides a maximum output of 10V.

2-96. OUTPUT ADJUSTMENT

2-97. Output level is adjusted using a 10-turn coarse control and a 10-turn fine control. Clockwise rotation of these controls increases output level.

2-98. DC CURRENT SOURCE

2-99. Range switching is provided by two interlocked pushbutton switches. On the lower range, output current is continuously adjustable from about 1 uA to 1 mA. The upper range provides a maximum output of 100 mA.

NOTE

There will be no output current flow unless a load is placed across the output terminals. To obtain a full 100 mA output, load resistance should not exceed 280 ohms.

2-100. Output current is adjusted using a 10-turn coarse control and a 10-turn fine control. Clockwise rotation of the controls increases output current.

2-101. Logic Timer

2-102. The logic timer allows the operator to measure the time during which a switch is open or closed, or the time interval between transitions of a system status signal. The timer can also be used as a simple stop watch.

2-103. The logic timer display is a 4 1/2 digit LCD, providing 19,999 counts and a resolution of one tenth of a second. A decimal point and overflow indication are provided.

2-104. OVERFLOW

2-105. The logic timer is capable of measuring delay times up to 1999.9 seconds (approx. 33 min.). If that limit is exceeded the display will indicate a timer overflow condition by displaying five zeros separated by decimal points (0.0.0.0.0).

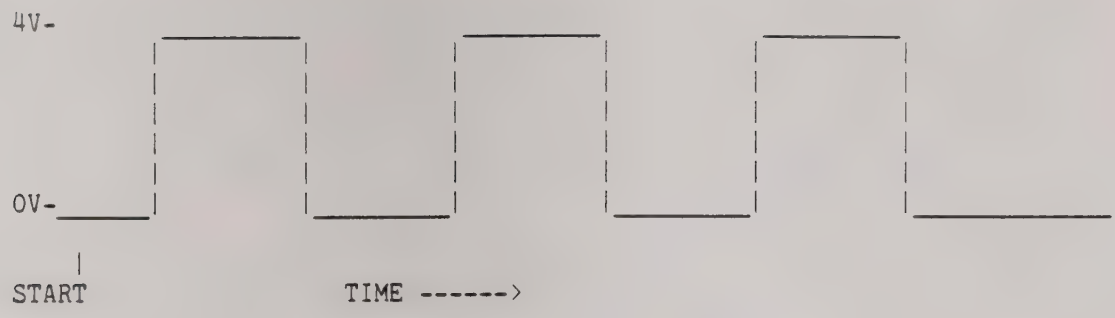

FIGURE 2-1. Sample input waveform

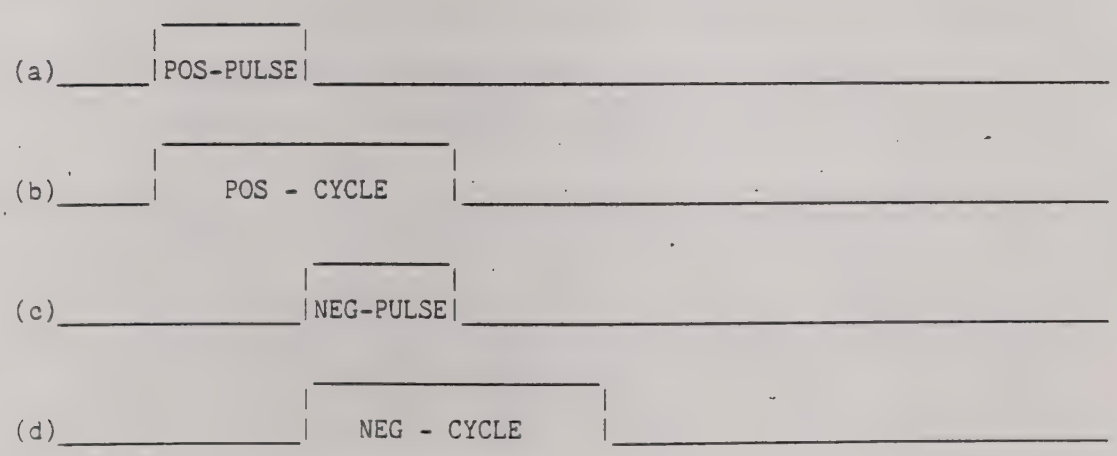

Figure 2-2. Time intervals measured for the input of figure 2-1 with the front panel controls selected as shown.

2-106. The five modes of operation are discussed below with reference to the above figure.

2-107. Figure 2-1 shows a typical status signal for which the operator may choose to make any of the measurements indicated in figure 2-2. If the front panel push-button labeled "POS EDGE" is depressed (causing the "NEG EDGE" button to be released), and the "CYCLE/PULSE" push-button is depressed, then when the "START" button is depressed, the Logic Timer will count from the first rising edge of the input signal until the next falling edge. This count period is indicated in figure 2-2a.

2-108. If the operator wishes to count the number of seconds from the first rising edge to the next rising edge, the "POS EDGE" button should be depressed and the "CYCLE/PULSE" button should be released. Then, when the "START" button is depressed, the interval indicated in figure 2-2b will be counted. The timer will stop counting at the second rising edge and display the final count until the "START" button is released. Releasing the "START" button will reset the display to zero.

2-109. Measurement of signals which are normally at a high level and are active low, can be acomplished with the Negative Edge mode. Figure 2-2c shows the measurement of a negative-going pulse by depressing the "NEG EDGE" and releasing the "CYCLE/PULSE" buttons.

2-110. To measure the time interval between the first high to low signal transition (after the start switch) and the next high to low transition, depress the "NEG EDGE" and "CYCLE/PULSE" buttons.

2-111. The logic timer will operate like a stopwatch if both the "POS EDGE" and "NEG EDGE" buttons are depressed at the same time. Now the "START" switch is used to start and stop the timer. The stopwatch function ignores the input, and times the interval from the depression of the start switch until the start switch is released. The time is held on the display after the start switch is released. Another interval can be added to the stored time by again pressing and releasing the start switch, or the dispay can be cleared by releasing either the "POS" or "NEG" edge buttons.

2-112. Connect the Logic Timer to the circuit under test by connecting the circuit ground to 2590A logic timer terminal "D" ; and the active input to the 2590A logic timer terminal "B". See figure 2-3 for input connections.

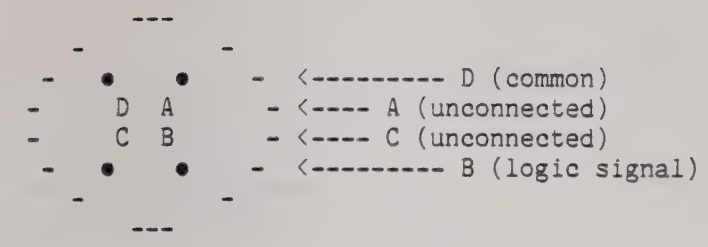

Figure 2-3 Logic Timer Connector on 2590A front panel

2-113. **Making Power Input Connections**

2-114. Apply power to the 2590FTS as follows:

1. Make power connections to the dc source as shown in Figure 2-4. Pin "A" is the dc + input, pin "C" is dc -, and pin "B" is earth ground.

2. Place the power switch to the ON position. The green power indicator adjacent to the power switch should come on. All four displays should also come on.

3. The instrument is now ready for operation.

CAUTION:

TO PREVENT POTENTIAL FIRE HAZARD OR DAMAGE TO THE INSTRUMENT, THE POWER FUSE SHOULD BE REPLACED ONLY WITH A 3 AMP AGC FAST-ACTING 250V FUSE.

2-115. FRONT PANEL POWER FUSE

2-116. The 2590FTS Electrical Systems Test Set is to be operated from a dc power source capable of delivering 20 to 34V at 3 amps. The power input is protected by a 3 amp AGC fast-acting 250V fuse, located directly above the power input connector.

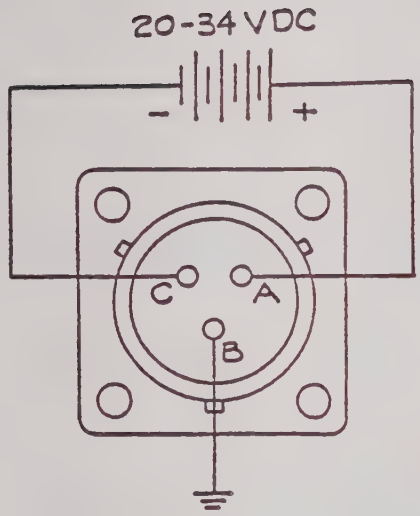

Figure 2-4. Power connections to the 2590FTS , to the connector labeled "24V 3A MAX".

SECTION 3
THEORY OF OPERATION

3-1. INTRODUCTION

3-2. This section contains an overall functional description and detailed circuit analysis of the 2590FTS. Simplified circuit diagrams are provided, as necessary, to supplement the text. Detailed schematics are available in Section 7 of the Service Manual.

3-3. OVERALL FUNCTIONAL DESCRIPTION

3-4. The 2590FTS is functionally divided into nine isolated subsections and associated power supplies. This isolation is achieved using four high frequency inverter transformers, T1-T4. The transformers have been designed to provide isolation to 350 volts from primary to secondary and from secondary to secondary.

3-5. Power for the inverter supplies is provided by a single switching preregulator that in turn is powered by an external dc input of between 20 and 34 volts.

3-6. The preregulator also provides an oscillator output signal that is used by the inverter drive logic to develop two non-overlapping square wave outputs for driving the inverter transformers. These signals are buffered by the transformer drive circuitry, T1 - T4 drive.

3-7. There are four analog busses in the 2590FTS circuitry that, along with a series of switches, provide an interface between the various inputs and outputs and the multimeter, frequency counter, and thermometer sections.

3-8. The thermometer input bus connects the thermometer front end via input select switches, S2, S26, and S27 to either of two thermocouple input assemblies, and/or to the thermometer calibrator. S26 and S27 are interlocked so that only one of the T/C inputs can be selected at a time. However, the calibrator can be connected through S2 to the thermometer input at any time. The calibrator output is then available at the TC+ and TC- terminals of the input assembly that is selected. In this configuration the thermometer section becomes a calibration source for testing and calibrating external thermocouple indicators.

3-9. The frequency counter input bus connects the counter input circuitry via S5, S6, S7 and S8, to either of the two internal frequency sources or to either of two external frequency inputs. These 4 switches are interlocked so that only one input can be connected to the counter.

3-10. There are two multimeter input busses; a voltage input bus and a current input bus. The voltage bus connects the multimeter V/Kohm input via input select switches S29 through S34 and S36 to either of the two internal frequency sources, either of the two external frequency sources, either of the two dc voltage sources, or to the external multimeter V/Kohm input.

3-11. The current bus connects the multimeter mA input via S35 and S36 to the internal current source or to the external multimeter mA input. All input select switches, S29 through S36 are interlocked.

3-12. Note that on the schematic diagrams each power supply output voltage is followed by another number enclosed in parentheses. This number indicates that each supply is referenced to the supply return that is marked with the same number. For example, +32V (6) is a +32 volt supply referenced to supply return marked 6 .

3-13. Note also that the relay timer connector in the relay timer section is referenced to the preregulator return. The timer is not isolated from this supply, nor is it isolated from the external power source.

3-14. BLOCK DIAGRAM ANALYSIS

3-15. Introduction

3-16. A BLOCK DIAGRAM DESCRIPTION OF THE 2590FTS IS GIVEN IN THE FOLLOWING PARAGRAPHS. EACH DISCRIPTION IS SUPPORTED BY A DETAILED SCHEMATIC IN SECTION 7 OF THE SERVICE MANUAL.

3-17. Temperature Section

3-18. The temperature section of the 2590FTS consists of a thermocouple thermometer with digital display, a thermocouple simulator (calibrator) and two thermocouple input assemblies. Circuit analysis for the thermometer includes description of the input assembly circuitry. The calibrator is covered in its own section later.

3-19. Thermometer Section

3-20. In operation the thermometer section executes a continuous series of measurement cycles to update the temperature display. the measurement cycle is controlled entirely by a microcomputer and includes three major subcycles; the auto-zero, integrate, and read periods. each subcycle controls the operation of the analog section of a dual-slope integrator.

3-21. The circuitry can be divided into two sections; analog and digital. the digital section is covered first.

3-22. DIGITAL SECTION

3-23. This circuitry includes a single chip microcomputer (U4), with a 2048 x 8 bit EPROM "piggybacked" to it; a CMOS hex open drain buffer: a 32 bit serial in/parallel out shift registor (U1 on the display board); a backplane oscillator (U2 and associated circuitry on the display board), and a liquid crystal display. Also included is a power-on reset (POR) circuit consisting of CR19, CR20, one section of U14, and associated circuitry.

3-24. The function of the digital circuitry is to convert the non-linear thermocouple probe voltage, as measured by the analog section, into a linear digital display, and to provide the necessary control signals to the analog section.

3-25. The microcomputer and EPROM assembly contain all operating program data, control logic and linearizing capability, as well as display data and update signals. Linearization of the non-linear input signal is accomplished by selecting one of eight programs which compute the correct temperature using a 4th order curve-fit approximation of the probe output. The operating program is selected to match a particular thermocouple type. Selection is achieved by presenting the microcomputer with a binary

encoded number corresponding to the thermocouple type in use. This number is generated by the T/C type select switch on the front panel.

3-26. Measurement data is continuously clocked out of the microcomputer in a decoded seven segment, bit serial, character serial format and presented to the serial input of a 32 bit shift resister, U1 on the display board. The shift register drives the display with 32 parallel bits of segment, polarity, decimal point, and temperature scale (^{o}C, ^{o}F) information. The square wave drive signal required by the display is generated by driving the true/compliment input (Pin 1) of the shift register with the backplane signal. This causes the register outputs to toggle between the positive and negative true states at the backplane frequency.

3-27. The microcomputer also provides six measurement control signals that determine the configuration of the analog circuitry during the various sub-cycles of the measurement routine. These signals are buffered by U3 and then used to control the off/on states of several FET switches.

3-28. ANALOG SECTION

3-29. The analog circuit is shown in simplified form in Figure 3-1. It consists of the thermocouple input and reference junction compensation circuit (located on the two T/C input assemblies); two voltage references, a buffer amplifier, an integrator, a gain stage, a comparator, the FET switches, and an open thermocouple detect circuit.

3-30. Thermocouple probe voltages and input terminal voltages present on the T/C input connector are passed through a low pass R-C input filter and appear at FET switch Q15. A pair of diodes are included in the input circuitry to provide over-voltage protection.

3-31. To compensate for error voltages present on the thermocouple input terminals, a reference junction compensation circuit is employed. This consists of an isothermal block, a pair of screw type input terminals, and a temperature sensing transistor.

3-32. The isothermal block maintains a negligible temperature differential between the input terminals and the sensing transistor. Thermocouple voltages introduced by the dissimilar metals at the input terminals vary as the isothermal block adjusts to ambient temperature.

3-33. Temperature changes are sensed by the forward biased transistor to produce a correction voltage. This correction voltage is present at FET switch Q17 and is sampled by the analog circuitry every twelve measurement cycles. This reading is stored in memory and used by the microcomputer to compute the correct temperature display.

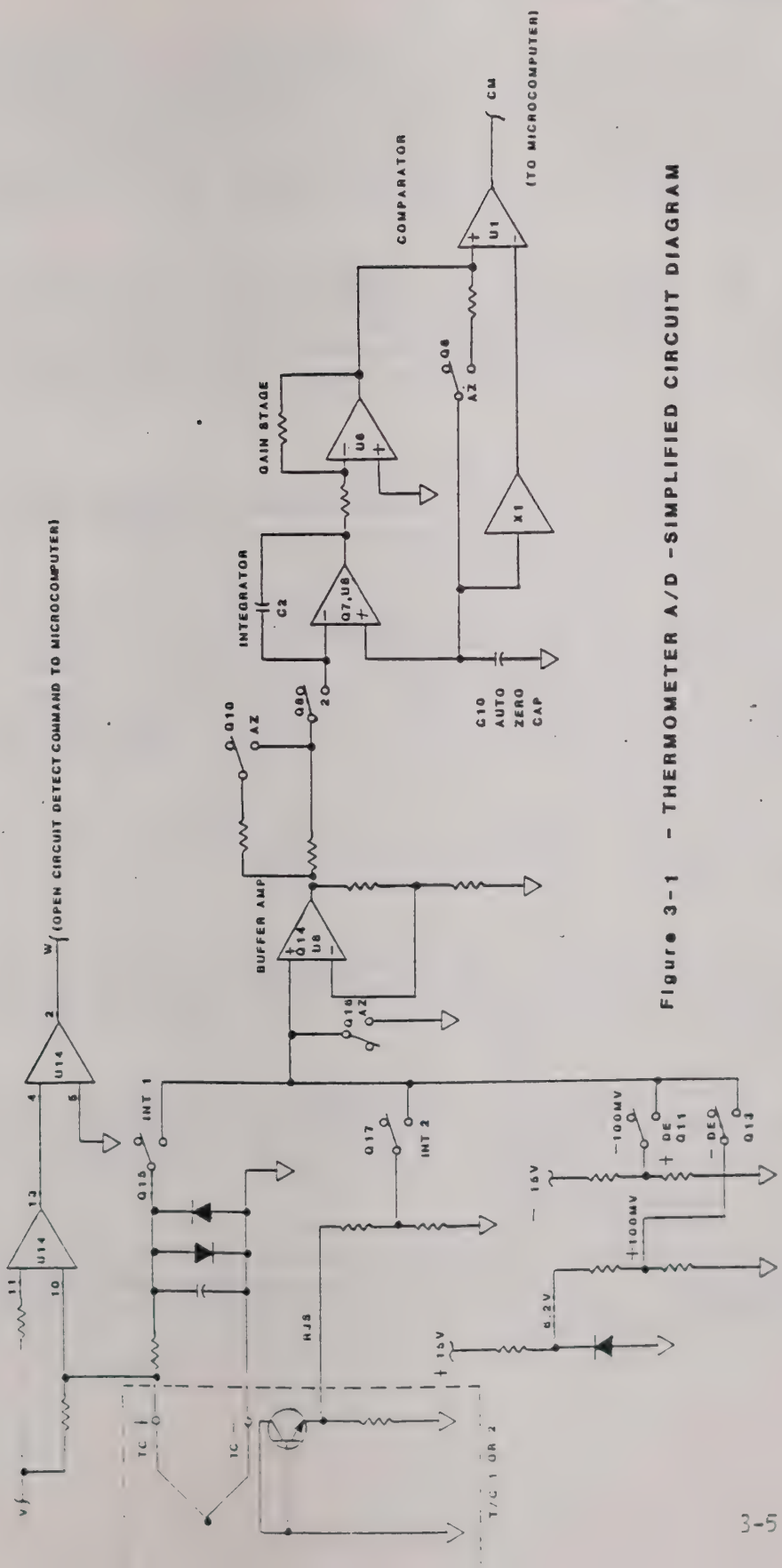

Figure 3-1 - THERMOMETER A/D -SIMPLIFIED CIRCUIT DIAGRAM

3-34. There are two reference voltages required by the measurement circuit. A +100 mV reference is taken off a discrete wire wound resistor network which is supplied by a precision 6.2V dc reference source. This +100 mV reference appears at FET switch Q13. A -100 mV reference is taken off a another resistor network supplied by the -15V power supply, and appears at FET switch Q11. The -100 mV reference is used when measuring positive inputs and the +100 mV reference is used for negative inputs.

3-35. The -100 mV reference is not a precision source. In order to maintain measurement accuracy for positive inputs, this reference is sampled every twelve measurement cycles and compared to the precision +100 mV reference. The resulting ratio is used by the microcomputer to "calibrate" the -100 mV reference and compute the proper temperature display.

3-36. THE MEASUREMENT ROUTINE

3-37. The buffer, integrator, gain stage, and comparator amplifiers combine to perform the actual measurement function. Refer to Figure 3-2 for measurement cycle waveforms.

3-38. The microcomputer initiates the measurement routine by generating an auto zero command. This closes FET switches Q16, Q10, and Q6. Q16 zeros the input to the buffer amplifier. With Q10 and Q6 closed, the integrator and gain stage are placed in a closed loop configuration that allows the auto-zero capacitor (C10) to charge to a value which is proportional to the algebraic sum of all the offsets present in the buffer, integrator, and gain stages.

3-39. After 100 to 200 ms the microcomputer terminates auto zero and Q16, Q10, and Q6 are opened. The auto zero capacitor retains the offset voltage for use later in the measurement cycle.

3-40. The microcomputer then generates an integrate command that closes Q15. On the leading edge of the integrate command Q8 is opened for a 1 ms settling period (delta 2). After 1 ms Q8 is closed and the thermocouple input voltage is applied through Q15, the buffer amplifier, and Q8 to the integrator for exactly 100 ms.

3-41. As the integrator capacitor charges, the integrator drives the comparator output to either 0 or +5V, depending upon the polarity of the unknown input. The microcomputer senses the state of the comparator at this time in order to determine which reference voltage to choose during the next measurement subcycle.

3-42. After a total of 101 ms the microcomputer terminates the integrate period and Q15 and Q8 open. The integrator capacitor has now been charged to a level which is proportional to the thermocouple input voltage.

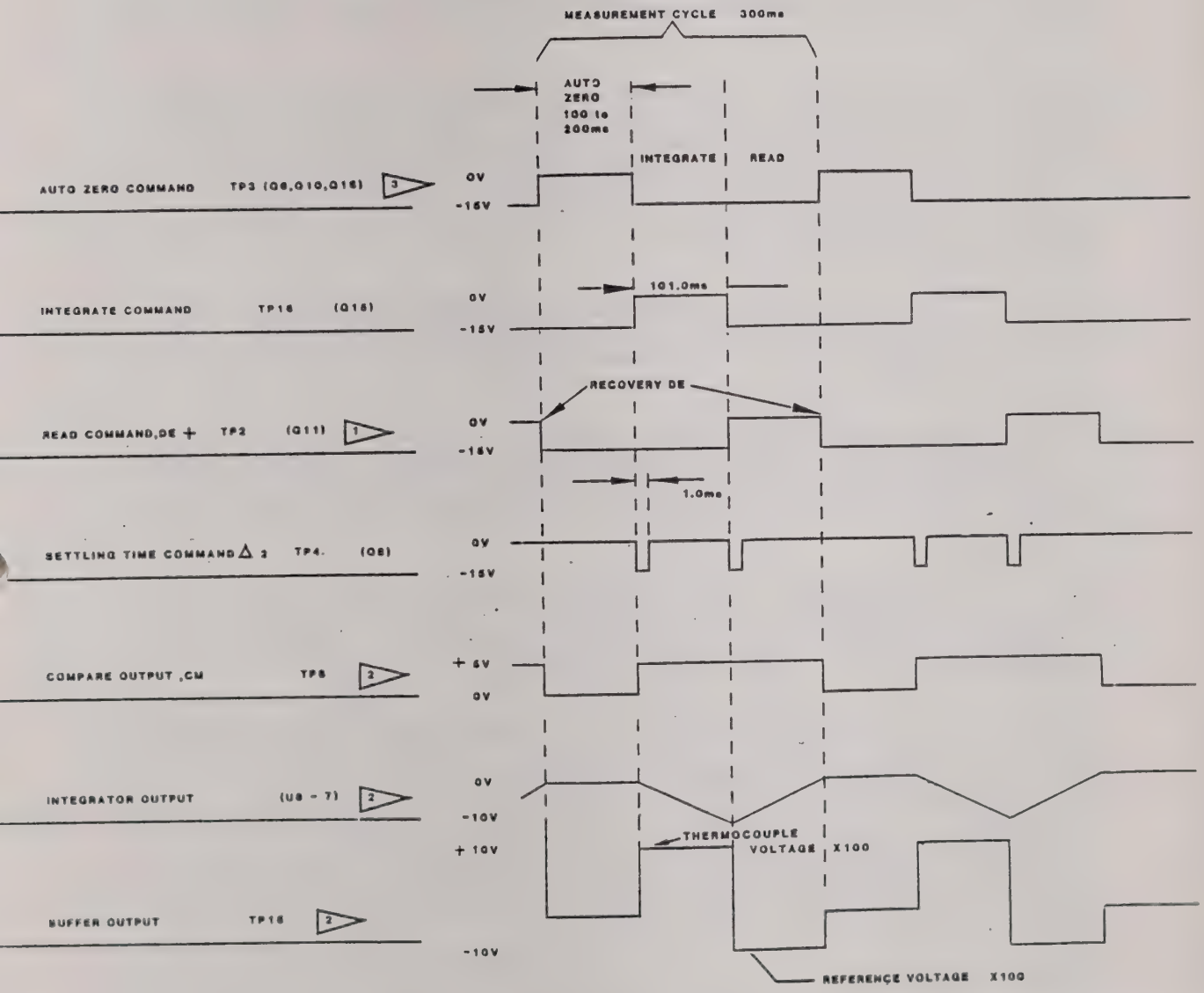

1 DE IS GENERATED FOR POSITIVE INPUT VOLTAGES. NEGATIVE INPUT VOLTAGES ENABLE THE DE - MODE WHICH IN TURN OPERATES FET SWITCH, Q13

2 WAVEFORM IS SHOWN FOR POSITIVE INPUT VOLTAGE. IT IS INVERTED FOR NEGATIVE INPUTS. SHOWN FOR FULL SCALE INPUTS.

3 THE Q NUMBERS IN PARENTHESIS REPRESENT FET SWITCHES OPERATED BY COMMANDS.

Figure 3-2 THERMOMETER A/D CONTROL SIGNALS

3-43. The microcomputer then generates either one of two read commands, depending upon the state of the comparator output during the integrate period. If a positive input has been sensed, Q11 is closed and the -100 mV reference is applied to the buffer amplifier. If a negative input has been sensed, Q13 is closed and the +100 mV reference is applied to the buffer.

3-44. After a 1 ms settling period Q8 is closed and the buffer output voltage is applied to the integrator input. This causes the integrator capacitor to discharge at a linear rate determined by the reference voltage. When the integrator voltage reaches the comparator trip point, which is referenced to the offset voltage stored on the auto-zero capacitor, the comparator changes state. This signals the microcomputer to terminate the read period.

3-45. The time required to discharge the integrator during the read period is directly proportional to the thermocouple input voltage. The microcomputer performs a precise time keeping function during the read period, and stores the resulting data in memory.

3-46. Every twelve measurement cycles the correction voltage output of the reference junction compensation circuit is sampled. The measurement routine is the same as described above. However, during the integrate subcycle, Q15 remains open and Q17 is closed by the INT 2 command from the microcomputer.

3-47. The microcomputer then uses the thermocouple input measurement data, the reference junction measurement data, and the thermocouple linearization data to compute the unknown temperature. The resulting information is then clocked out to the display.

3-48. Poor input connections or faulty thermocouple probes are detected by an open circuit detector. This consists of 3/4 of U14 and associated circuitry. This circuit senses the impedance at the T/C input by comparing the loading (and therefore amplitude) of a square wave, applied to the input of the thermometer, to a reference square wave. If the reference is exceeded, one section of U14 flags the microcomputer that an open circuit condition has been detected (a nominal 2 Kohm impedence). The microcomputer then sends an open circuit code (O.C.) to the display.

3-50. **Calibrator** (Refer to Figure 3-3)

3-51. The calibrator consists of a precision voltage reference, a non-inverting amplifier (U20) an inverting amplifier, U21 and a voltage divider network. The divider network consists of the output adjustment potentiometers (located on the front panel) and precision fixed resistors (located on the main circuit board).

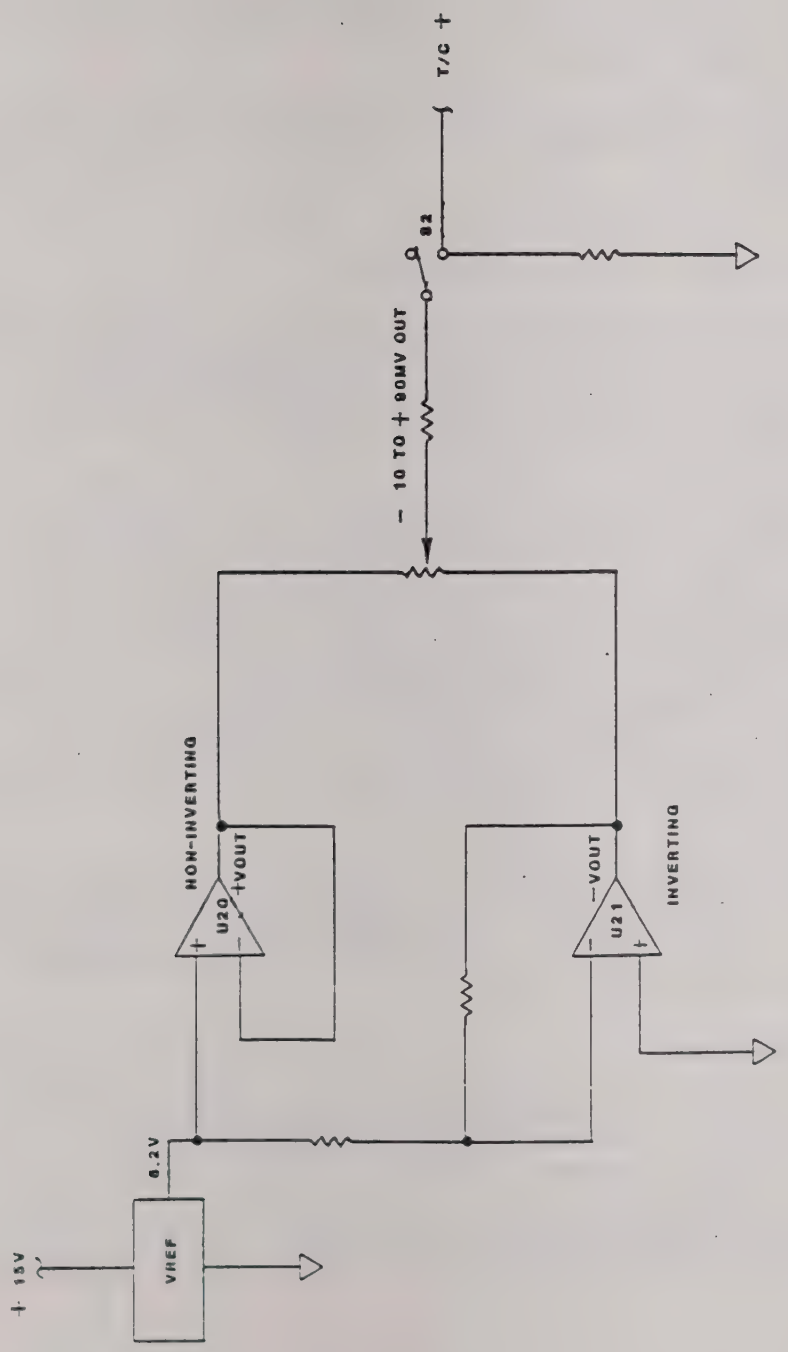

Figure 3-3. T/C Calibrator -- Simplified Circuit Diagram

3-52. The voltage reference output is applied to the non-inverting input of unity gain amplifier U20 and to the inverting input of U21. The resulting outputs are applied to opposite ends of the parallel combination consisting of the fine and coarse output controls. The algebraic sum of the voltages present on the sliders of the output controls appears at one end of the T/C signal select switch (S2).

3-53. When switch S2 is depressed (CAL OUT position) the calibrator output is connected to the thermometer input and to the T/C+ terminal of the selected T/C input.

3-54. **Frequency Counter** (Refer to Figure 3-4.)

3-55. The frequency counter consists of an input conditioning circuit (Q101, R114, U103 and associated circuitry); a time base and counter control circuit (Y101, U101, U102); a counter string (U101, U103, U104 on the display board); an overflow detect circuit (U102 on the display board); a power on reset circuit; and a digital display.

3-56. The input signal is taken from one of the two internal frequency sources or one of the two External Input Connectors on the front pannel, depending on the setting of the switches S5,S6,S7, and S8 in the Audio Frequency Section. Signals from the internal sources are connected directly into the counter front end. Signals from the external input connectors are first applied across a 250kohm potentometer. The setting of the potentometer reduces the input amplitude so that noise riding on the input signal does not trigger the counter. The input is then ac coupled and applied to the gate of Q101 through a low pass filter. Hex inverter U103 squares and level shifts the signal present at the source of Q101 and applies it to pin 8 of NAND gate U105.

3-57. The counting function is controlled by three control signals; GATE, LATCH, AND RESET; that are generated by Y101, U101, and U102 and gated by U105. Y101 supplies a master time base frequency of 5.24288 MHz. U101 is a monolithic oscillator/controller and U102 is a decade counter configured as a divide-by-6 ring counter.

3-58. The "GT" signal at U101, pin 13 is a square wave with a 50% duty cycle and a period of 200 ms. It is inverted by 1/6 of U104 and applied to the clock input of U102. At the beginning of a measurement cycle the "CO" output of U102 transitions from LO to HI, enabling 1/4 of U105. This allows the input frequency to appear at the clock input of the counter string (U103, pin 2 on the display PCB). The "CO" output of U102 remains HI for five cycles of the "GT" input (exactly 1 second). The "CO" output then goes LO, removing the input frequency from U103, pin 2 on the display PCB.

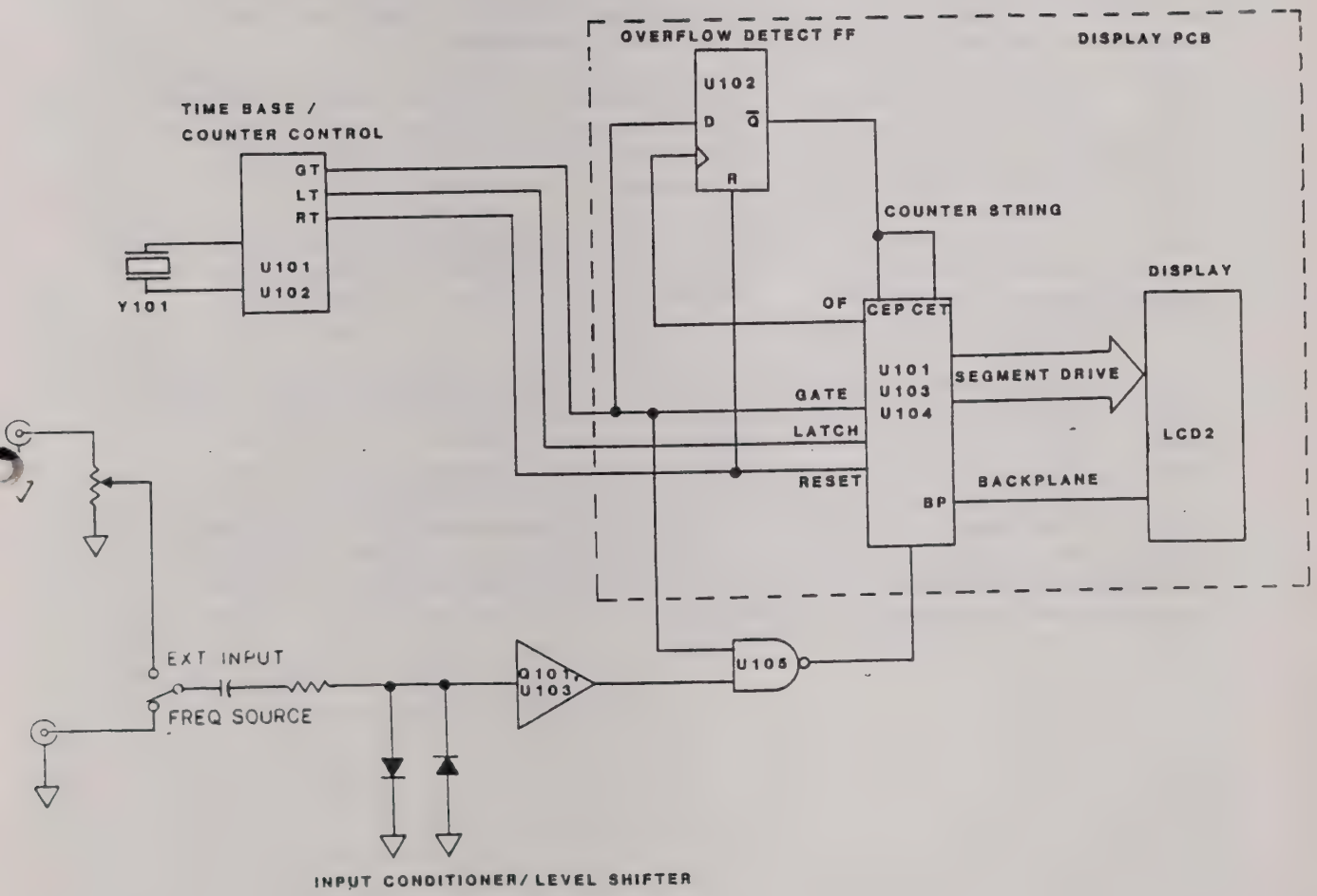

Figure 3-4. Frequency Counter -- Simplified Circuit Diagram

3-59. The "LT" and "RT" signals, present at pins 2 and 14 of U101 on the main PCB, are short pulses (312 us) that occur once during each cycle of the "GT" signal. The transition of the "GT" signal that causes the "CO output of U102 to go LO, also causes the "Q5" output of U102 to go HI. The "Q5" output remains HI for one full cycle of the "GT" input (200 ms). This allows the LATCH signal to appear at pin 34 of U101 and pin 1 of U104 on the display board. This latches the accumulated count from the counter string to the liquid crystal display. The RESET signal then appears at pin 33 of U101 and pin 1 of U103 on the display PCB. This resets the counter string in preparation for the next measurement cycle.

3-60. 200 ms after the end of the gate period, "Q5" of U102 on the main PCB goes LO. At the same time the "Q6" output of U102 goes HI, resetting U102, and the measurement cycle begins again. The total measurement/ display update period is then 1.2 seconds.

3-61. The counter string consists of a 4 1/2 digit monolithic counter/decoder/driver (U101); a BCD counter (U103); and a BCD to seven segment decoder/latch (U104). U103 and U104 comprise the least significant digit of the counter string.

3-62. Overflow detection is provided by 1/2 of D-type flip flop, U102 on the display PCB. It tests the state of the GATE signal when the carry output "OF" of counter U101 transistions from a logical "1" state to- logical "0". If "OF" transistions when the GATE signal is still active (logical "1"), the output of U102 goes LO and disables BCD counter, U103. At the same time the counter string "wraps around" to an all zero count, and pin 27 of U101 goes true, which lights all decimal points on the display. The display is then 0.0.0.0.0, indicating that an overflow condition has occurred.

3-63. Frequency Sources

3-64. In the following discussion all component designators apply to frequency source No. 1. However all operational theory covered also applies to frequency source No. 2.

3-65. The frequency sources of the 2590FTS consist of a voltage controlled oscillator/function generator, an output driver stage, and a dc offset circuit.

3-66. The VCO/function generator section consists of U109 and associated circuitry. U109 provides sine and square wave outputs. Output frequency is a function of the voltage level on Pin 8 of U109, and can be swept from 30 Hz to 15 kHz by adjusting the fine and coarse frequency controls (R150, R151) located on the front panel.

3-67. The VCO output waveform is connected through function select switch S4 (located on the front panel) to one end of the amplitude control, R152 (located on the front panel). Output amplitude is adjusted by varying the amount of VCO output that is applied to the driver stage.

3-68. The output driver stage consists of U111, U108, Q102, Q103, and associated circuitry. These components operate together as a power amplifier with complimentary outputs, providing both voltage and current gain. U108 also provides output current limiting.

3-69. The offset voltage section consists of a variable bi-polar voltage reference and a class AB amplifier with a complimentary output (U110, Q105, Q104 and associated circuitry). This circuit is enabled when the offset switch (S43) on the front panel is in the ON (OUT) position. With the offset enabled, frequency source output LO is connected to offset supply common. The offset amplifier output then elevates the entire frequency source circuit by an amount that is adjustable (via R153 on the front panel) between -18V dc and +18V dc.

3-70. **Multimeter** (Refer to Figure 3-5.)

3-71. The multimeter section of the 2590FTS consists of input protection circuitry, and input divider. a precision voltage reference, an rms to dc converter, a monolithic analog to digital converter, a digital display, and range and function switching circuitry.

3-72. Protection for the V/Kohm input is provided by R202, Q201, RT201, RV201, RV202, and RV203. Protection for the mA input is provided by fuses F1, F2, CR201 and U207. F2 is in series with F1 to prevent damage to the instrument if the open circuit voltage of the circuit being measured exceeds 250 volts.

3-73. The input divider consists of a precision resistor network, U206, and associated compensation circuitry. The input divider scales the unknown input to a level that is within the range of the analog to digital converter. The compensation circuitry maintains a flat divider frequency response when measuring ac inputs.

3-74. The precision voltage reference consists of band-gap reference, U202, and associated circuitry. It provides the reference voltage required by the a/d converter.

3-75. The rms to dc converter consists of U201, U203 and associated circuitry. When measuring ac voltage and current the rms to dc converter provides a dc output to the a/d converter that is equal to the rms value of the input waveform.

3-76. The analog to digital converter consists of U201 and associated circuitry on the display board. U201 contains all the digital logic and most of the analog circuitry required to convert the scaled analog input to a digital representation of that input. It also contains all the decoding logic and drive circuitry required by the display.

3-77. The conversion process utilizes the same dual-slope integration technique outlined in the thermometer theory (see Thermometer, Digital Section). The a/d converter can be configured to operate in either of two internal ranges, determined by the voltage level on Pin 38 of U201. When measuring any function on the .2 and 20 ranges, U201 functions as a 200 mV full scale converter. When measuring on the 2, 200, and 2,000 ranges, U201 is configured as a 2 volt full-scale converter.

3-78. The range and function switches S11-S20 configure the multimeter input circuitry to accomodate the type and level of input to be measured. The range switches also select the a/d converter range and decimal point location on the display.

3-79. Figure 3-6 shows input circuit configuration in the various measurement modes. Voltage and current measurements should require no further explanation. However, because of the unique measurement method used, the resistance and conductance functions will be explained.

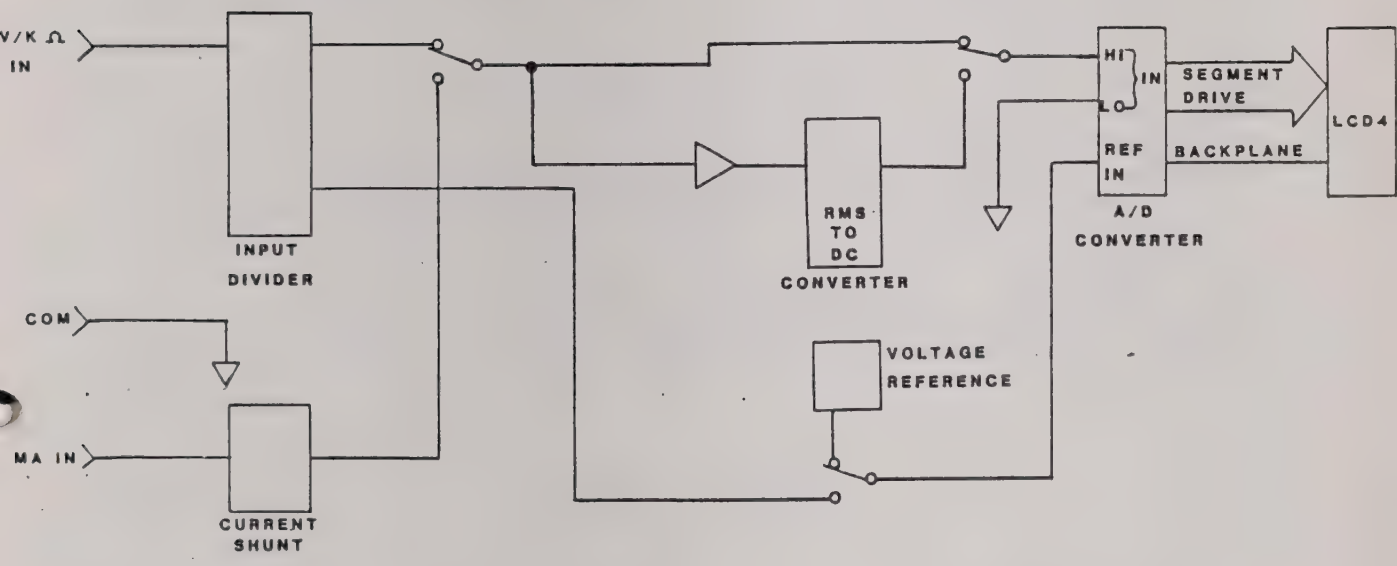

Figure 3-5. Multimeter -- Simplified Circuit Diagram

3-80. In the resistance measurement mode the voltage reference is removed from the a/d converter. The reference voltage is then supplied by the drop across a precision resistor selected by the range switches. A voltage source is connected across the series combination of this precision resistor (part of the input divider network) and the unknown resistance.

3-81. The resulting voltage drop across the unknown resistance is applied to the integrator during the integrate period. During the read period the voltage across the precision resistors is used to discharge the integrator. This operation measures the ratio of the voltage drops across the two resistances and, therefore, the ratio of the unknown resistance to the (known) precision resistor. The resulting reading is then latched out to the liquid crystal display.

3-82. When measuring conductance (the inverse of resistance) the voltage reference is also removed from the a/d converter, as it is for resistance measurements. However, in this case, the voltage drop across the precision resistor is used to charge the integrator during the integrate period. The voltage drop across the unknown resistance is used to discharge the integrator during the read period.

3-83. The result of this operation is the ratio of the (known) precision resistor to the unknown resistance, or the inverse of the resistance. The resultant reading is then latched out to the liquid crystal display.

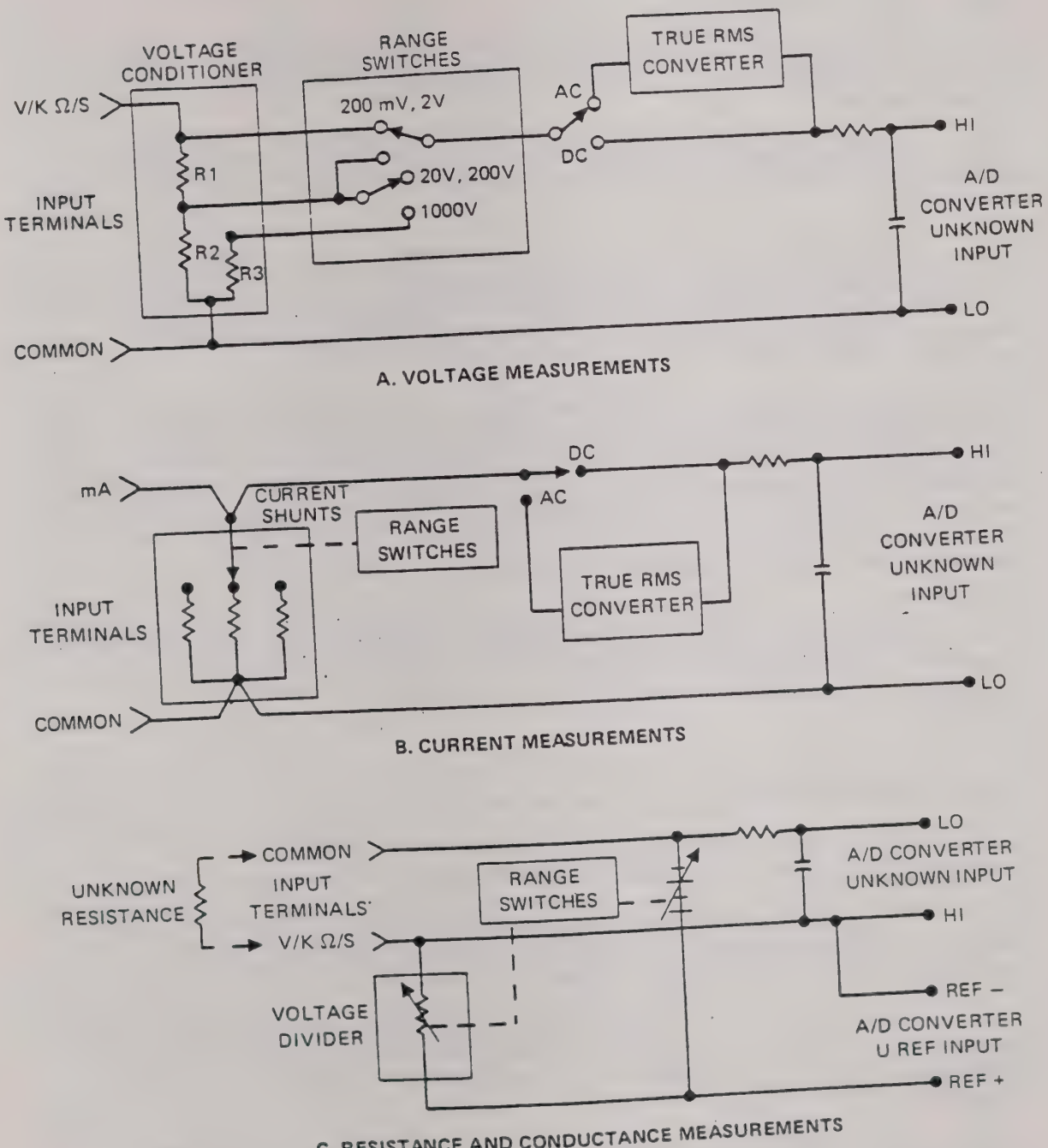

Figure 3-6. Multimeter Input Signal Conditioner

3-84. DC Voltage Sources

3-85. In the following discussion all component designations apply to dc voltage source No. 1. However, all theory covered applies to both dc voltage sources.

3-86. The dc voltage sources consist of a voltage reference, an error amplifier, and emitter follower output stage, and an output protection circuit.

3-87. The output of band-gap voltage reference, U252, is applied to a precision voltage divider network. The division ratio of the network is determined by the position of the range select switches, S37 and S38, located on the front panel, and by the position of the fine and coarse amplitude controls R264 and R265 (also on the front panel).

3-88. Output regulation is provided by an error amplifier, 1/2 U251. The voltage level at the output is compared to the adjusted reference voltage and the resulting error output controls conduction of emitter follower, Q257. The other half of U251, Q252, R247, and associated bias components comprise a power sharing network. The opamp senses the output voltage and current and by varying the conduction of Q252, adjusts the voltage across Q257 to limit power disipation in that device to a safe level.

3-89. Output short-circuit protection is provided by Q251 and R262. At a current of approximatly 600 mA the voltage drop across R262 is sufficient to turn on Q251 and prevent any further increase in output current.

3-90. Current Source

3-91. The current source consists of a voltage reference, an error amplifier, and a Darlington pair output stage.

3-92. The output of band-gap voltage reference, U255, is applied to a precision divider network. The division ratio is determined by the position of the fine and coarse output controls, R289 and 290.

3-93. Range selection is made via switches S41 and S42, located on the front panel. These switches select either one of two resistors (R282 or R283) that, in turn, determine the voltage level fed back to the output regulation stage.

3-94. Output regulation is provided by error amplifier U256. The voltage level at the top of range resistor R282 or R283 (depending on the range selected) is compared to the adjusted reference voltage. The resulting error output controls the conduction of Darlington pair Q255 and Q256. Q256 is located on a heat sink mounted on the range control switch deck.

3-95. Relay Timer

3-96. The relay timer section of the 2590FTS consists of a 10 Hz clock, gating logic, a monolithic 19,999 count counter/driver, timer control switches, an overflow detect circuit, and a liquid crystal display.

3-97. The clock circuit consists of a 38.4 kHz crystal, Y301 and a divider string (U301, U302,and U304), which produce a 10 Hz timebase output. This output is gated by U303 and applied to the counter (U301 on the display board).

3-98. During the timing operation transitions of the 10Hz clock are counted by counter, U301 on the display board. U301 updates the display on every count (every .1 seconds). At the end of a timing cycle the accumulated count is held in display until the START switch, S25, is released.

3-99. The gating circuitry consists of U302,U303,U305, and associated circuitry on the main PCB. R306 and R307 convert the relay contact status into 0 and +5V logic levels. U303 is a quad, two input NAND gate with Schmitt trigger inputs. The Schmitt trigger inputs prevent switching transients from appearing at the counter input.

3-100. Configuration of the gate circuitry is dependent upon the timing mode selected by S22 and S23. Figures 3-7 and 3-8 are simplified circuit diagrams that show circuit configuration for each timing mode. For simplicity the delay pick-up (S22) and delay drop out (S23) switches are not shown.

3-101. DELAY PICK-UP TIMING

3-102. Refer to Figure 3-7 for delay pick up timing. In this mode, the timer energizes the relay coil and then measures the time that it takes for the relay contacts to close.

3-103. The timing cycle begins when the START switch, S25 is depressed, which causes two things to occur: 1) +24 volts is applied to one end of the relay coil through S25-B which energizes the relay; and 2) a low signal from S25-D (inverted) removes the reset and enables the counter. At the end of the delay period the relay contacts close and +24 volts is applied through the relay contacts and S25-A to R306 and R307. This disables the counter, ending the timing cycle.

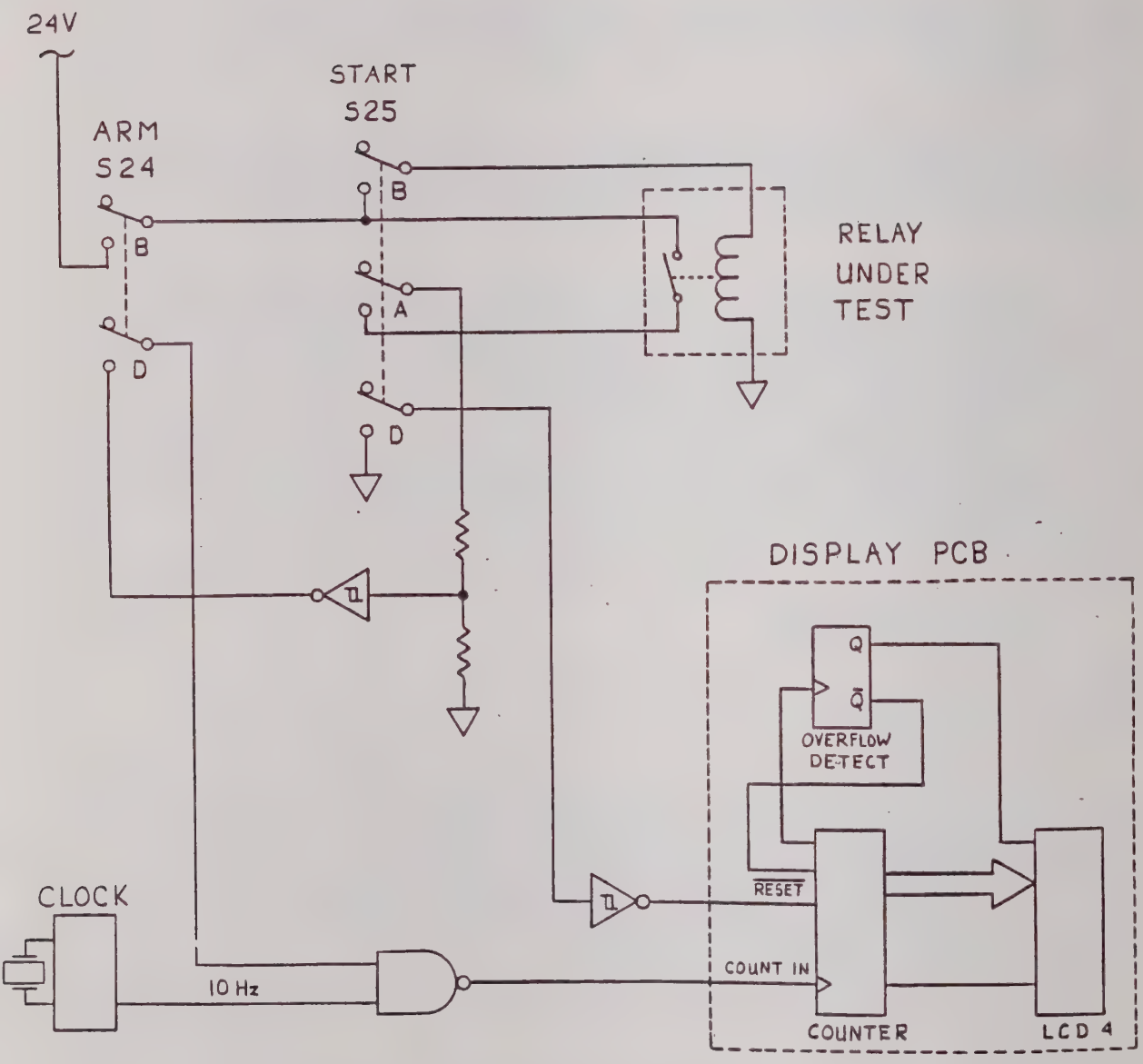

Figure 3-7 Relay Timer, Delay Pick-Up Mode

3-104. DELAY DROP-OUT TIMING

3-105. Refer to Figure 3-8 for delay drop-out timing. In this mode the relay is energized when the ARM switch is depressed. The timer then de-energizees the relay and measures the time that it takes for the contacts to open.

3-106. The timing cycle begins when the START switch, S25, is depressed. S25-B opens and the relay coil is de-energized. At the same time +24 volts is applied through the closed relay contacts and S25-A to R306, R307, and the input logic gates. This signal and the 'unreset' signal from S25-D enable the counter. At the end of the delay period the relay contacts open and +24 volts is removed. This disables the counter, ending the timing cycle.

3-107. Counter overflow is detected by U302 on the display board. U302 is a dual D-type flip-flop configured as a divide-by-two counter. Pin 28 of U301 will transition from high to low on count 10,000 and count 20,000 of the counter. If the timer is not halted before count 20,000, the second "Q" output of U302 will go high, turning on all the decimal points and segments A, D, E, and F of the most significant digit in the display. At the same time the second output "$\overline{Q}$" of U302 will go low, disabling the counter. The resulting display will be frozen at 0.0.0.0.0, indicating that an overflow condition has occured.

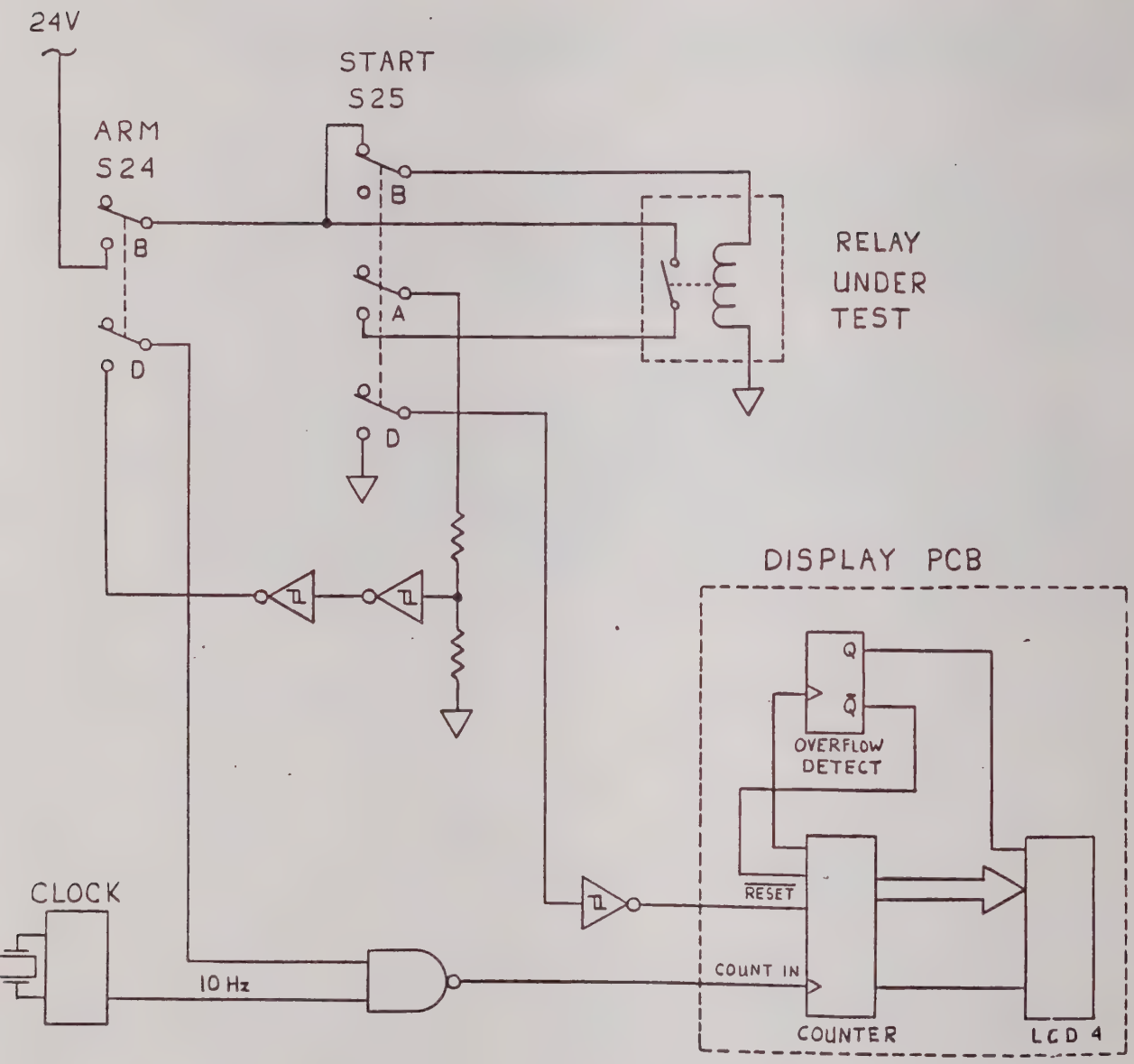

Figure 3-8 Relay Timer, Delay Drop-Out Mode

3-108. Power Supplies

3-109. PRE-REGULATOR

3-110. The preregulator provides a regulated 12 volts dc to the inverter supplies from an unregulated 20 to 32 V dc input by turning a switching transistor off and on as required to maintain the proper output voltage. It consists of a pulse width modulator, U401, a switching element consisting of Q401 and Q402, an energy storage element, L401, and a beta string (R409 and R410).

3-111. The pulse width modulator (PWM) contains all the circuitry required for regulator control. It also provides a pulse output that is used by the inverter drive logic. When the PWM turns on Q402 the input voltage is applied through Q402 to L401. When the PWM turns off Q402, the energy stored in L401 supplies the load current. When the voltage level sensed by the beta string drops below a level determined by a voltage reference in the PWM, the PWM turns Q402 on again. The switching frequency is constant (about 52 kHz), however, the duty cycle varies inversely with input amplitude and directly with output load.

3-112. INVERTERS

3-113. The inverter drive logic consisting of U402 and U403 uses the pulse oscillator output of the PWM to generate two inverter drive signals that are 180° out of phase. These signals are buffered by CMOS buffer U404.

3-114. The outputs of U404 are converted to bi-polar drive levels by V-MOS power FETS. Power transistors then provide the output levels required to drive the inverter transformer primaries (T4 is driven directly by VMOS FETS). Voltages present on the transformer secondaries are rectified and filtered, and the resulting dc levels are regulated using standard power supply techniques.

SECTION 4
MAINTENANCE

WARNING

THESE SERVICING INSTRUCTIONS ARE FOR USE BY QUALIFIED PERSONNEL ONLY. TO AVOID ELECTRICAL SHOCK, DO NOT PERFORM ANY SERVICING OTHER THAN THAT CONTAINED IN THE OPERATING INSTRUCTIONS UNLESS YOU ARE QUALIFIED TO DO SO.

4-1. INTRODUCTION

4-2. This section of the manual contains maintenance information for the Solar Turbines 2590FTS Turbine Electrical System Test Set. This includes Service Information, General Maintenance, Access Procedures, Performance Tests and Calibration Adjustments. The performance and calibration procedures for each part of the instrument are located in the following sections of this manual (note that section numbers are given, rather than page numbers):

	VERIFICATION Section	CALIBRATION Section
Thermometer	4-3-1	4-13
Thermocouple Input Module	4-3-1	4-14
Calibration Output	4-3-2	*
Multimeter		
Display	4-4-1	*
Resist./Conductance	4-4-2	*
Volts	4-4-3	4-10
Current	4-4-5	*
Frequency Counter	4-5	4-11
Frequency Sources	4-6	4-12
DC Voltage Sources	4-7	*
DC Current Sources	4-8	*
Relay Timer	4-9	4-16

4-3. The Performance test is recommended as an acceptance test when the instrument is first received, and later as a preventive maintenace tool to verify proper operation and accuracy. To maintain the one-year specifications, the instrument must be calibrated at one-year intervals.

EQUIPMENT TYPE	REQUIRED SPECIFICATIONS	WHERE USED	RECOMMENDED MANUFACTURER
Thermocouple Wires	Type K preferred	Temperature Section	Omega
Mecury Thermometer (degrees C or F)	0.02 deg. C Resolution 0.05 deg. F Resolution	Temperature Section	Princo Model ASTM56C Princo Model ASTM56F
Dewer Flask/Cap	1 Pint Capacity	Temperature Section	Thermos
Voltage Divider	100:1 Ratio .005% Ratio Accuracy	Temperature Section	Fluke Y2022, Fluke 720A or (Shunt Output Fluke 750A with 1uF cap)
DC Voltage Calibrator	0-10 V dc Output 0.002% accuracy 100 uV Resolution	Temperature	Fluke Model 343A
Voltmeter	.005% Accuracy 1 uV Resolution	Various	Fluke 8800A
Multimeter Calibrator	dc voltage: 0 to 1000V±.05% ac Voltage: 100 Hz - 0 to 200V ± .05% - 0 to 750V ± .8% 1 kHz - 0 to 250V ± .05% 10 kHz - 0 to 110V ± .3% 20 kHz - 0 to 20V ±.5% dc current: 0-200 mA ±.04% ac Current: 0-200 uA ±.01% Resistance: 0-10 Mohm in steps of powers-of-ten ±.05%	Multimeter	Fluke 5100A
Frequency Counter	1 Hz Resolution 6 MHz Range	Counter/Relay Timer	Fluke 1952A
Synthesized Signal Generator	110 kHz Range 25 mV to 10V rms Output Amplitude	Counter	Fluke 6011A
Oscilloscope	Dual Trace 30MHz Bandwidth	Frequency Source/ Power Supplies	Tektronix 465
Decade Resistor	Accuracy: 1% Range: 1,111,111 ohm Resolution: .1 ohm	Temperature	General Radio 1434-G
DC Power Supply	20 - 34V dc @ 3A	2590FTS	LAMBDA

TABLE 4-1 REQUIRED TEST EQUIPMENT

4-4. GENERAL MAINTENANCE

4-5. Equipment Required

4-6. Table 4-1 lists the equipment required for the verification and calibration procedures.

4-7. Static Awareness

4-8. The 2590FTS contains CMOS circuitry on both the main circuit board and display board. These integrated circuits can be destroyed by electrostatic discharge resulting from careless handling. To prevent this possibility it is important that the following precautions be observed when calibrating or servicing the instrument.

1. Never remove, install or otherwise connect or disconnect PCB's and/or components without first turning the 2590FTS power switch to OFF.

2. All servicing should be performed at a static-free work station. All work surfaces should be grounded. Pink poly bench top covering connected to earth ground is recommended.

3. All service personnel should be connected to earth ground using wrist straps.

4. Keep plastic, vinyl, and Styrofoam out of the immediate work area.

5. Handle circuit boards and integrated circuits by their edges only. Never handle PCB's or IC's by their connectors.

6. Use a grounded tip soldering iron only.

4-9. Cleaning

4-10. Clean the front panel and case with denatured alcohol or a mild solution of detergent and water. Clean dust from the circuit boards with low pressure dry air. Contaminants can be washed from the circuit boards with de-mineralized water and a soft brush (avoid getting excessive amounts of water on the switches).

CAUTION

Do not use aromatic hydrocarbons or chlorinated solvents for cleaning. These solutions may damage plastic materials used in the instrument. If Freon T.F. degreaser is used, be careful to keep it away from the switch decks. (Freon cleaners remove lubricants from the switches and may force contaminants into them.) Do not handle the PCBs by the connector pins. Oil from the skin contaminates the metal surfaces. Handle the PCBs by the edges only. Improper handling of the main board may also cause static damage. Refer to the manual section on electrostatic damage.

4-11. Fuse Replacement

WARNING

Remove all test leads and disconnect the unit from the power source before attempting fuse replacement.

4-12. The 2590FTS has two fuses accessible on the front panel. F1 is the power fuse and should be replaced, when necessary, with a fast-acting 3A AGC 250V fuse. F2 protects the multimeter mA input and should be replaced with a fast-acting 2A AGC 250V fuse.

4-13. A third fuse, F3, is located inside the instrument on a small input circuit board attached to the 2590FTS front panel. F3 is a 3A 600V fuse which provides additional protection for the multimeter mA input in the event that the test leads are accidently connected to a circuit with a voltage of over 250V. Replacement of this fuse will require the instrument to be opened (see Access Procedure 4.2.10).

4-14. **Access Procedure**

4-15. DISASSEMBLY PROCEDURE

1. With the power switch off, disconnect any cables from the front panel of the 2590FTS including the power cable.

2. Remove the six large phillips-head screws from the outside edge of the front panel.

3. Lift the instrument out of the case (this may take several attempts, since it is a tight fit).

4. Remove the two self-locking nuts from the studs on the underside of the front panel located near the LCD displays (use a 5/16" hex nut driver).

5. Grasp the panel on the edge opposite the hinge and pull it upward. Lock the panel in the up position with the locking arm located at one side of chassis.

4-16. **Assembly Procedure**

1. If the bottom shield has been removed, fasten it in place.

2. Clean off any lint from the LCDs and the inside face of the LCD lens (on the front panel) so that the displays are clean when the front panel is closed.

3. Remove the two T/C input modules so that they won't get scratched when the front panel is closed.

4. Close the front panel and fasten it shut with the two self-locking nuts. Take care to align all of the pushbutton switches with the front pannel cutouts before closing front pannel, and insure that the switches operate before installing the instrument in its case.

5. Carefully set the chassis assembly into the carrying case, oriented so the display LCDs are nearest the carrying case hinges.

6. Fasten the six Phillips-head screws at the front panel.

4-17. PERFORMANCE TEST

4-18. The following tests may be used for verifying calibration. The equipment used in the test is specified in Table 4-1. If the instrument should fail to meet specifications in any performance test, calibration can be performed as outlined in the Service Manual. All tests should be conducted with an ambient temperature of 25 °C ± 2 °C.

4-19. Temperature Section Verification

The following procedures verify the thermometer section, followed by the thermocouple Calibration Output section.

4-20. The performance of the thermometer in the 2590FTS can be verified by a test performed either at ambient or at ice point. Either of the tests can be used for initial acceptance or periodic calibration verification in a lab environment. Choose one of these tests to perform. Then go on to test A for ambient, or test B for ice bath.

A. Ambient Temperature Test -- Construct an ambient lag bath as described below and perform the procedure which follows.

1. Prepare a thermos type container by drilling two holes in its cap for the mercury thermometer and thermocouple wires or use a standard laboratory cork.

2. Fill this container with room temperature water.

3. Replace the cap or cork and insert thermocouple wires and thermometer as shown in Figure 4-1.

4. Allow bath to stabilize for at least 30 minutes.

5. Turn the 2590FTS ON and allow it to stabilize for at least 5 minutes.

6. Connect the calibrator, divider, 2590FTS, and lag bath as shown in Figure 4.1.

7. Select the temperature scale (°C or °F) on the 2590FTS to agree with the mercury thermometer in the lag bath.

8. Select the thermocouple range corresponding to the thermocouple type in use.

9. Read the temperature of the mercury thermometer in the lag bath and find the corresponding mV value for this temperature in Table 4-3. Interpolation may be used as necessary.

10. Algebraically subtract the mV reading found in the previous step from the first value found under the "Divider Output mV" column of Table 4-2, for the thermocouple type in use.

11. Obtain a divider output equal to the result found in the previous step. If the Y2022 divider is used, adjust the dc calibrator for an output equal to the desired divider output times 100. If a Fluke 720A or 750A is used, first adjust the dc calibrator output to an appropriate cardinal point (refer to the divider instruction manual). Then adjust the divider for the proper output.

NOTE

If a Fluke 720A or 750A is used as the voltage divider a 1 uF capacitor must be placed across its output terminals, otherwise the 2590FTS will indicate an open thermocouple condition. The capacitor is not needed if a Fluke Y2022 is used.

12. Verify that the 2590FTS Temperature display reads the value listed in Table 4-2, within the limits specified (90-day or 1 year as required).

13. Repeat steps 9, 10, and 11 for the remaining values in Table 4-2.

Example: Assume a lag bath reading of 25.86 °C and a K-type thermocouple is in use.

a. Round the lag bath reading to 25.9 °C.

b. According to Table 4-3, the K-type mV equivalent of 25 °C is 1.00 mV. The mV equivalent of 26 °C is 1.041 mV. By interpolation the mV equivalent of 25.9 °C =

1.000 mV + .9(1.041-1.000) mV
= 1.000 mV + (.9 X .041) mV
= 1.000 mV + .037 mV
= 1.037 mV

c. Referring to Table 4-2, the first verification point for K-type thermocouple is -123.3 °C. According to the "divider Output mV" column, this corresponds to -4.230 mV. The required divider output should be:

-4.230 mV - 1.037 mV = -5.267 mV.

d. A divider output of -5.267 mV should yield an 2590FTS temperature display of -123.3 °C ± 0.2 °C.

e. Assuming, again, a lag bath temperature of 25.86 °C, refer to the 3rd verification point for K-type thermocouple in Table 4-2. The divider output for a reading of 648.9 °C should be:

26.975 mV - 1.037 mV = 25.938 mV.

B. Ice Bath Temperature Test -- Construct an ice-point lag bath as described below and perform the procedure which follows.

1. Prepare a thermos type container by drilling two holes in its cap for the mercury thermometer and thermocouple wires or use a standard laboratory cork.

2. Fill the container with shaved or crushed ice made from distilled water.

3. Fill the container with enough distilled water so that the ice becomes slush, but not enough to float the ice.

4. Replace the cap and insert thermocouple wires and thermometer as shown in Figure 4-1.

5. Turn the 2590FTS ON and allow it to stabilize for at least 5 minutes.

6. Select the temperature scale (°C or °F) on the 2590FTS to agree with the mercury thermometer in the lag bath.

7. Select the thermocouple range corresponding to the thermocouple type in use.

8. Verify the ice bath is at the freezing point (0.0 °C, 32 °F).

9. Using Table 4-2, obtain a divider output equal to the first value found under the "Divider Output mV" column for the thermocouple type in use.

NOTE

If a Fluke 720A or 750A is used as the voltage divider a 1 uF capacitor must be placed across its output terminals, otherwise the 2590FTS will indicate an open thermocouple condition. The capacitor is not needed if a Fluke Y2022 is used.

10. Verify that the 2590FTS temperature display reads the value listed in Table 4-2, within the limits specified (90-day or 1-year as required).

11. Repeat the above two steps for the remaining values in Table 4-2.

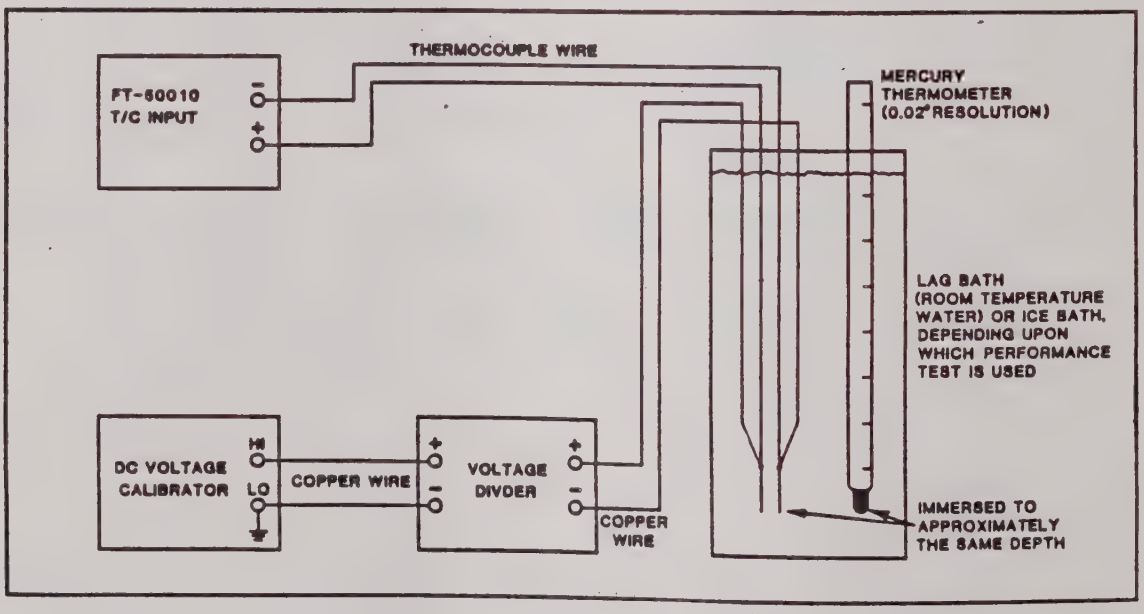

Figure 4-1. Equipment Connections for Ambient or Ice Point Test

THERMOCOUPLE TYPE	DIVIDER OUTPUT, mV	A21-50 DISPLAY (Degree F) 90 DAYS		1 YEAR		A21-50 DISPLAY (Degree C) 90 DAYS		1 YEAR	
J	-5.553	-190.0	± 0.2	-190.0	± 0.2	-123.3	± 0.2	-123.3	± 0.02
	-2.483	-60.0	± 0.2	-60.0	± 0.2	-51.1	± 0.2	-51.1	± 0.2
	23.317	800.0	± 0.2	800.0	± 0.3	426.7	± 0.2	426.7	± 0.2
K	-4.230	-190.0	± 0.3	-190.0	± 0.3	-123.3	± 0.2	-123.3.	± 0.2
	-1.929	-60.0	± 0.3	-60.0	± 0.3	-51.1	± 0.2	-51.1	± 0.2
	26.975	1200.0	± 0.5	1200.0	± 0.5	648.9	± 0.3	648.9	± 0.3
	52.939	2400.0	± 0.7	2400.0	± 0.7	1315.6	± 0.4	1315.6	± 0.4
E	-9.604	-400.0	± 0.3	-400.0	± 0.3	-240.0	± 0.2	-240.0	± 0.2
	-6.471	-200.0	± 0.3	-200.0	± 0.3	-128.9	± 0.2	-128.9	± 0.2
	35.562	900.0	± 0.3	900.0	± 0.4	482.2	± 0.2	482.2	± 0.2
	75.024	1800.0	± 0.6	1800.0	± 0.6	982.2	± 0.3	982.2	± 0.3
R	1.508	400.0	± 0.4	400.0	± 0.4	240.0	± 0.3	240.0	± 0.3
	8.141	1500.0	± 0.6	1500.0	± 0.7	815.6	± 0.4	815.6	± 0.2
	20.275	3100.0	± 0.9	3100.0	± 1.0	1704.4	± 0.6	1704.4	± 0.6
S	1.962	500.0	± 0.3	500.0	± 0.4	260.0	± 0.2	260.0	± 0.2
	7.514	1500.0	± 0.5	1500.0	± 0.6	815.6	± 0.3	815.6	± 0.3
	17.993	3100.0	± 0.8	3100.0	± 0.9	1704.4	± 0.5	1704.4	± 0.5
T	-6.105	-400.0	± 0.3	-400.0	± 0.3	-240.0	± 0.2	-240.0	± 0.2
	-4.009	-190.0	± 0.3	-190.0	± 0.3	-123.3	± 0.2	-123.3	± 0.2
	8.062	350.0	± 0.3	350.0	± 0.3	176.7	± 0.2	176.7	± 0.2
	20.458	740.0	± 0.4	740.0	± 0.4	393.3	± 0.2	393.3	± 0.2
C	0.522	100.0	± 0.3	100.0	± 0.3	37.8	± 0.2	37.8	± 0.2
	19.947	2000.0	± 0.6	2000.0	± 0.7	1093.3	± 0.4	1093.3	± 0.4
	36.539	4100.0	± 1.1	4100.0	± 1.2	2260.0	± 0.6	2260.0	± 0.6
B	0.891	797.0	± 0.5	797.0	± 0.5	425.0	± 0.3	425.0	± 0.3
	6.780	2192.0	± 0.7	2192.0	± 0.8	1200.0	± 0.4	1200.0	± 0.4
	13.690	3290.0	± 0.9	3290.0	± 1.0	1810.0	± 0.5	1810.0	± 0.5

TABLE 4-2 PERFORMANCE TEST VALUES

Table 4-3. Thermocouple Reference Tables

Temperature in °C. Reference Junction at 0°C

°C	0	1	2	3	4	5	6	7	8	9	10
	THERMOELECTRIC VOLTAGE IN ABSOLUTE MILLIVOLTS										
0	0.000	−0.000	−0.000	−0.001	−0.001	−0.001	−0.001	−0.001	−0.002	−0.002	−0.002
10	−0.002	−0.002	−0.002	−0.002	−0.002	−0.002	−0.002	−0.002	−0.003	−0.003	−0.003
20	−0.003	−0.003	−0.003	−0.003	−0.003	−0.002	−0.002	−0.002	−0.002	−0.002	−0.002
30	−0.002	−0.002	−0.002	−0.002	−0.002	−0.001	−0.001	−0.001	−0.001	−0.001	−0.000
40	−0.000	−0.000	−0.000	0.000	0.000	0.001	0.001	0.001	0.002	0.002	0.002
50	0.002	0.003	0.003	0.003	0.004	0.004	0.004	0.005	0.005	0.006	0.006
60	0.006	0.007	0.007	0.008	0.008	0.009	0.009	0.010	0.010	0.011	0.011
70	0.011	0.012	0.012	0.013	0.014	0.014	0.015	0.015	0.016	0.017	0.017
80	0.017	0.018	0.019	0.020	0.020	0.021	0.022	0.022	0.023	0.024	0.025
90	0.025	0.026	0.026	0.027	0.028	0.029	0.030	0.031	0.031	0.032	0.033

Temperature in °F. Reference Junction at 32°F

°F	0	1	2	3	4	5	6	7	8	9	10
	THERMOELECTRIC VOLTAGE IN ABSOLUTE MILLIVOLTS										
0	0.006	0.006	0.006	0.006	0.005	0.005	0.005	0.005	0.004	0.004	0.004
10	0.004	0.004	0.003	0.003	0.003	0.003	0.003	0.002	0.002	0.002	0.002
20	0.002	0.002	0.002	0.001	0.001	0.001	0.001	0.001	0.001	0.000	0.000
30	0.000	0.000	0.000	−0.000	−0.000	−0.000	−0.001	−0.001	−0.001	−0.001	−0.001
40	−0.001	−0.001	−0.001	−0.001	−0.001	−0.001	−0.002	−0.002	−0.002	−0.002	−0.002
50	−0.002	−0.002	−0.002	−0.002	−0.002	−0.002	−0.002	−0.002	−0.002	−0.002	−0.002
60	−0.002	−0.002	−0.002	−0.003	−0.003	−0.003	−0.003	−0.003	−0.003	−0.003	−0.003
70	−0.003	−0.003	−0.003	−0.003	−0.003	−0.003	−0.003	−0.002	−0.002	−0.002	−0.002
80	−0.002	−0.002	−0.002	−0.002	−0.002	−0.002	−0.002	−0.002	−0.002	−0.002	−0.002
90	−0.002	−0.002	−0.002	−0.002	−0.002	−0.001	−0.001	−0.001	−0.001	−0.001	−0.001
100	−0.001	−0.001	−0.001	−0.001	−0.000	−0.000	−0.000	−0.000	0.000	0.000	0.000
110	0.000	0.000	0.001	0.001	0.001	0.001	0.001	0.001	0.002	0.002	0.002
120	0.002	0.002	0.002	0.002	0.003	0.003	0.003	0.003	0.003	0.004	0.004
130	0.004	0.004	0.004	0.005	0.005	0.005	0.005	0.005	0.006	0.006	0.006
140	0.006	0.006	0.007	0.007	0.007	0.007	0.008	0.008	0.008	0.009	0.009

TYPE

B

Platinum -6% Rhodi

vs

Platinum -30% Rhodium

Table 4-3. Thermocouple Reference Tables (cont.)

Temperature in °F. Reference Junction at 32°F

°F	0°	1°	2°	3°	4°	5°	6°	7°	8°	9°
THERMOELECTRIC VOLTAGE IN ABSOLUTE MILLIVOLTS										
0°	−.234	−.227	−.220	−.213	−.206	−.198	−.191	−.184	−.177	−.169
10°	−.162	−.155	−.148	−.140	−.133	−.126	−.118	−.111	−.104	−.096
20°	−.089	−.082	−.074	−.067	−.060	−.052	−.045	−.037	−.030	−.023
30°	−.015	−.008	.000	.007	.014	.022	.029	.037	.044	.052
40°	.059	.067	.074	.082	.089	.097	.104	.112	.120	.127
50°	.135	.142	.150	.157	.165	.173	.180	.188	.196	.203
60°	.211	.218	.226	.234	.241	.249	.257	.264	.272	.280
70°	.288	.295	.303	.311	.319	.326	.334	.342	.350	.357
80°	.365	.373	.381	.389	.396	.404	.412	.420	.428	.436
90°	.443	.451	.459	.467	.475	.483	.491	.499	.506	.514

TYPE
C*
Tungsten -5% Rhenium
vs
Tungsten -26% Rhenium

*Not an ANSI Standard

Temperature in °C. Reference Junction at 0°C

°C	0	1	2	3	4	5	6	7	8	9	10
THERMOELECTRIC VOLTAGE IN ABSOLUTE MILLIVOLTS											
−40	−2.254	−2.308	−2.362	−2.416	−2.469	−2.522	−2.575	−2.628	−2.681	−2.734	−2.787
−30	−1.709	−1.764	−1.819	−1.874	−1.929	−1.983	−2.038	−2.092	−2.146	−2.200	−2.254
−20	−1.151	−1.208	−1.264	−1.320	−1.376	−1.432	−1.487	−1.543	−1.599	−1.654	−1.709
−10	−0.581	−0.639	−0.696	−0.754	−0.811	−0.868	−0.925	−0.982	−1.038	−1.095	−1.151
0	0.000	−0.059	−0.117	−0.176	−0.234	−0.292	−0.350	−0.408	−0.466	−0.524	−0.581
0	0.000	0.059	0.118	0.176	0.235	0.295	0.354	0.413	0.472	0.532	0.591
10	0.591	0.651	0.711	0.770	0.830	0.890	0.950	1.011	1.071	1.131	1.192
20	1.192	1.252	1.313	1.373	1.434	1.495	1.556	1.617	1.678	1.739	1.801
30	1.801	1.862	1.924	1.985	2.047	2.109	2.171	2.233	2.295	2.357	2.419
40	2.419	2.482	2.544	2.607	2.669	2.732	2.795	2.858	2.921	2.984	3.047
50	3.047	3.110	3.173	3.237	3.300	3.364	3.428	3.491	3.555	3.619	3.683
60	3.683	3.748	3.812	3.876	3.941	4.005	4.070	4.134	4.199	4.264	4.329
70	4.329	4.394	4.459	4.524	4.590	4.655	4.720	4.786	4.852	4.917	4.983
80	4.983	5.049	5.115	5.181	5.247	5.314	5.380	5.446	5.513	5.579	5.646
90	5.646	5.713	5.780	5.846	5.913	5.981	6.048	6.115	6.182	6.250	6.317

TYPE
E
Nickel - Chromium
vs
Copper - Nickel

Table 4-3. Thermocouple Reference Tables (cont.)

TYPE E
Nickel - Chromium vs Copper - Nickel

Temperature in °F, Reference Junction at 32°F

°F	0	1	2	3	4	5	6	7	8	9	10
	THERMOELECTRIC VOLTAGE IN ABSOLUTE MILLIVOLTS										
0	−1.026	−0.994	−0.963	−0.931	−0.900	−0.868	−0.836	−0.805	−0.773	−0.741	−0.709
10	−0.709	−0.677	−0.645	−0.613	−0.581	−0.549	−0.517	−0.485	−0.453	−0.421	−0.389
20	−0.389	−0.357	−0.324	−0.292	−0.260	−0.227	−0.195	−0.163	−0.130	−0.098	−0.065
30	−0.065	−0.033	0.000	0.033	0.065	0.098	0.131	0.163	0.196	0.229	0.262
40	0.262	0.295	0.327	0.360	0.393	0.426	0.459	0.492	0.525	0.558	0.591
50	0.591	0.624	0.658	0.691	0.724	0.757	0.790	0.824	0.857	0.890	0.924
60	0.924	0.957	0.990	1.024	1.057	1.091	1.124	1.158	1.192	1.225	1.259
70	1.259	1.292	1.326	1.360	1.394	1.427	1.461	1.495	1.529	1.563	1.597
80	1.597	1.631	1.665	1.699	1.733	1.767	1.801	1.835	1.869	1.903	1.937
90	1.937	1.972	2.006	2.040	2.075	2.109	2.143	2.178	2.212	2.247	2.281
100	2.281	2.316	2.350	2.385	2.419	2.454	2.489	2.523	2.558	2.593	2.627
110	2.627	2.662	2.697	2.732	2.767	2.802	2.837	2.872	2.907	2.942	2.977
120	2.977	3.012	3.047	3.082	3.117	3.152	3.187	3.223	3.258	3.293	3.329
130	3.329	3.364	3.399	3.435	3.470	3.506	3.541	3.577	3.612	3.648	3.683
140	3.683	3.719	3.755	3.790	3.826	3.862	3.898	3.933	3.969	4.005	4.041

TYPE J
Iron vs Copper - Nickel

Temperature in °C, Reference Junction at 0°C

°C	0	1	2	3	4	5	6	7	8	9	10
	THERMOELECTRIC VOLTAGE IN ABSOLUTE MILLIVOLTS										
−40	−1.960	−2.008	−2.055	−2.102	−2.150	−2.197	−2.244	−2.291	−2.338	−2.384	−2.431
−30	−1.481	−1.530	−1.578	−1.626	−1.674	−1.722	−1.770	−1.818	−1.865	−1.913	−1.960
−20	−0.995	−1.044	−1.093	−1.141	−1.190	−1.239	−1.288	−1.336	−1.385	−1.433	−1.481
−10	−0.501	−0.550	−0.600	−0.650	−0.699	−0.748	−0.798	−0.847	−0.896	−0.945	−0.995
0	0.000	−0.050	−0.101	−0.151	−0.201	−0.251	−0.301	−0.351	−0.401	−0.451	−0.501
0	0.000	0.050	0.101	0.151	0.202	0.253	0.303	0.354	0.405	0.456	0.507
10	0.507	0.558	0.609	0.660	0.711	0.762	0.813	0.865	0.916	0.967	1.019
20	1.019	1.070	1.122	1.174	1.225	1.277	1.329	1.381	1.432	1.484	1.536
30	1.536	1.588	1.640	1.693	1.745	1.797	1.849	1.901	1.954	2.006	2.058
40	2.058	2.111	2.163	2.216	2.268	2.321	2.374	2.426	2.479	2.532	2.585
50	2.585	2.638	2.691	2.743	2.796	2.849	2.902	2.956	3.009	3.062	3.115
60	3.115	3.168	3.221	3.275	3.328	3.381	3.435	3.488	3.542	3.595	3.649
70	3.649	3.702	3.756	3.809	3.863	3.917	3.971	4.024	4.078	4.132	4.186
80	4.186	4.239	4.293	4.347	4.401	4.455	4.509	4.563	4.617	4.671	4.725
90	4.725	4.780	4.834	4.888	4.942	4.996	5.050	5.105	5.159	5.213	5.268

Temperature in °F, Reference Junction at 32°F

°F	0	1	2	3	4	5	6	7	8	9	10
	THERMOELECTRIC VOLTAGE IN ABSOLUTE MILLIVOLTS										
0	−0.885	−0.858	−0.831	−0.803	−0.776	−0.748	−0.721	−0.694	−0.666	−0.639	−0.611
10	−0.611	−0.583	−0.556	−0.528	−0.501	−0.473	−0.445	−0.418	−0.390	−0.362	−0.334
20	−0.334	−0.307	−0.279	−0.251	−0.223	−0.195	−0.168	−0.140	−0.112	−0.084	−0.056
30	−0.056	−0.028	0.000	0.028	0.056	0.084	0.112	0.140	0.168	0.196	0.224
40	0.224	0.253	0.281	0.309	0.337	0.365	0.394	0.422	0.450	0.478	0.507
50	0.507	0.535	0.563	0.592	0.620	0.648	0.677	0.705	0.734	0.762	0.791
60	0.791	0.819	0.848	0.876	0.905	0.933	0.962	0.990	1.019	1.048	1.076
70	1.076	1.105	1.134	1.162	1.191	1.220	1.248	1.277	1.306	1.335	1.363
80	1.363	1.392	1.421	1.450	1.479	1.507	1.536	1.565	1.594	1.623	1.652
90	1.652	1.681	1.710	1.739	1.768	1.797	1.826	1.855	1.884	1.913	1.942
100	1.942	1.971	2.000	2.029	2.058	2.088	2.117	2.146	2.175	2.204	2.233
110	2.233	2.263	2.292	2.321	2.350	2.380	2.409	2.438	2.467	2.497	2.526
120	2.526	2.555	2.585	2.614	2.644	2.673	2.702	2.732	2.761	2.791	2.820
130	2.820	2.849	2.879	2.908	2.938	2.967	2.997	3.026	3.056	3.085	3.115
140	3.115	3.145	3.174	3.204	3.233	3.263	3.293	3.322	3.352	3.381	3.411

Table 4-3. Thermocouple Reference Tables (cont.)

Temperature in °C. Reference Junction at 0°C

°C	0	1	2	3	4	5	6	7	8	9	10
	THERMOELECTRIC VOLTAGE IN ABSOLUTE MILLIVOLTS										
-40	-1.527	-1.563	-1.600	-1.636	-1.673	-1.709	-1.745	-1.781	-1.817	-1.853	-1.889
-30	-1.156	-1.193	-1.231	-1.268	-1.305	-1.342	-1.379	-1.416	-1.453	-1.490	-1.527
-20	-0.777	-0.816	-0.854	-0.892	-0.930	-0.968	-1.005	-1.043	-1.081	-1.118	-1.156
-10	-0.392	-0.431	-0.469	-0.508	-0.547	-0.585	-0.624	-0.662	-0.701	-0.739	-0.777
0	0.000	-0.039	-0.079	-0.118	-0.157	-0.197	-0.236	-0.275	-0.314	-0.353	-0.392
0	0.000	0.039	0.079	0.119	0.158	0.198	0.238	0.277	0.317	0.357	0.397
10	0.397	0.437	0.477	0.517	0.557	0.597	0.637	0.677	0.718	0.758	0.798
20	0.798	0.838	0.879	0.919	0.960	1.000	1.041	1.081	1.122	1.162	1.203
30	1.203	1.244	1.285	1.325	1.366	1.407	1.448	1.489	1.529	1.570	1.611
40	1.611	1.652	1.693	1.734	1.776	1.817	1.858	1.899	1.940	1.981	2.022
50	2.022	2.064	2.105	2.146	2.188	2.229	2.270	2.312	2.353	2.394	2.436
60	2.436	2.477	2.519	2.560	2.601	2.643	2.684	2.726	2.767	2.809	2.850
70	2.850	2.892	2.933	2.975	3.016	3.058	3.100	3.141	3.183	3.224	3.266
80	3.266	3.307	3.349	3.390	3.432	3.473	3.515	3.556	3.598	3.639	3.681
90	3.681	3.722	3.764	3.805	3.847	3.888	3.930	3.971	4.012	4.054	4.095

Temperature in °F. Reference Junction at 32°F

°F	0	1	2	3	4	5	6	7	8	9	10
	THERMOELECTRIC VOLTAGE IN ABSOLUTE MILLIVOLTS										
0	-0.692	-0.671	-0.650	-0.628	-0.607	-0.585	-0.564	-0.543	-0.521	-0.500	-0.478
10	-0.478	-0.457	-0.435	-0.413	-0.392	-0.370	-0.349	-0.327	-0.305	-0.284	-0.262
20	-0.262	-0.240	-0.218	-0.197	-0.175	-0.153	-0.131	-0.109	-0.088	-0.066	-0.044
30	-0.044	-0.022	0.000	0.022	0.044	0.066	0.088	0.110	0.132	0.154	0.176
40	0.176	0.198	0.220	0.242	0.264	0.286	0.308	0.331	0.353	0.375	0.397
50	0.397	0.419	0.441	0.464	0.486	0.508	0.530	0.553	0.575	0.597	0.619
60	0.619	0.642	0.664	0.686	0.709	0.731	0.753	0.776	0.798	0.821	0.843
70	0.843	0.865	0.888	0.910	0.933	0.955	0.978	1.000	1.023	1.045	1.068
80	1.068	1.090	1.113	1.135	1.158	1.181	1.203	1.226	1.248	1.271	1.294
90	1.294	1.316	1.339	1.362	1.384	1.407	1.430	1.452	1.475	1.498	1.520
100	1.520	1.543	1.566	1.589	1.611	1.634	1.657	1.680	1.703	1.725	1.748
110	1.748	1.771	1.794	1.817	1.839	1.862	1.885	1.908	1.931	1.954	1.977
120	1.977	2.000	2.022	2.045	2.068	2.091	2.114	2.137	2.160	2.183	2.206
130	2.206	2.229	2.252	2.275	2.298	2.321	2.344	2.367	2.390	2.413	2.436
140	2.436	2.459	2.482	2.505	2.528	2.551	2.574	2.597	2.620	2.643	2.666

TYPE K

Nickel - Chromium vs Nickel - Aluminum

Table 4-3. Thermocouple Reference Tables (cont.)

Temperature in °C. Reference Junction at 0°C

°C	0	1	2	3	4	5	6	7	8	9	10
	THERMOELECTRIC VOLTAGE IN ABSOLUTE MILLIVOLTS										
0	0.000	0.005	0.011	0.016	0.021	0.027	0.032	0.038	0.043	0.049	0.054
10	0.054	0.060	0.065	0.071	0.077	0.082	0.088	0.094	0.100	0.105	0.111
20	0.111	0.117	0.123	0.129	0.135	0.141	0.147	0.152	0.158	0.165	0.171
30	0.171	0.177	0.183	0.189	0.195	0.201	0.207	0.214	0.220	0.226	0.232
40	0.232	0.239	0.245	0.251	0.258	0.264	0.271	0.277	0.283	0.290	0.296
50	0.296	0.303	0.310	0.316	0.323	0.329	0.336	0.343	0.349	0.356	0.363
60	0.363	0.369	0.376	0.383	0.390	0.397	0.403	0.410	0.417	0.424	0.431
70	0.431	0.438	0.445	0.452	0.459	0.466	0.473	0.480	0.487	0.494	0.501
80	0.501	0.508	0.515	0.523	0.530	0.537	0.544	0.552	0.559	0.566	0.573
90	0.573	0.581	0.588	0.595	0.603	0.610	0.617	0.625	0.632	0.640	0.647

Temperature in °F. Reference Junction at 32°F

°F	0	1	2	3	4	5	6	7	8	9	10
	THERMOELECTRIC VOLTAGE IN ABSOLUTE MILLIVOLTS										
0	−0.089	−0.087	−0.084	−0.082	−0.079	−0.076	−0.073	−0.071	−0.068	−0.065	−0.063
10	−0.063	−0.060	−0.057	−0.054	−0.051	−0.049	−0.046	−0.043	−0.040	−0.037	−0.035
20	−0.035	−0.032	−0.029	−0.026	−0.023	−0.020	−0.017	−0.015	−0.012	−0.009	−0.006
30	−0.006	−0.003	0.000	0.003	0.006	0.009	0.012	0.015	0.018	0.021	0.024
40	0.024	0.027	0.030	0.033	0.036	0.039	0.042	0.045	0.048	0.051	0.054
50	0.054	0.057	0.060	0.064	0.067	0.070	0.073	0.076	0.079	0.082	0.086
60	0.086	0.089	0.092	0.095	0.098	0.101	0.105	0.108	0.111	0.114	0.118
70	0.118	0.121	0.124	0.127	0.131	0.134	0.137	0.141	0.144	0.147	0.150
80	0.150	0.154	0.157	0.161	0.164	0.167	0.171	0.174	0.177	0.181	0.184
90	0.184	0.188	0.191	0.194	0.198	0.201	0.205	0.208	0.212	0.215	0.218
100	0.218	0.222	0.225	0.229	0.232	0.236	0.239	0.243	0.246	0.250	0.253
110	0.253	0.257	0.261	0.264	0.268	0.271	0.275	0.278	0.282	0.286	0.289
120	0.289	0.293	0.296	0.300	0.304	0.307	0.311	0.315	0.318	0.322	0.326
130	0.326	0.329	0.333	0.337	0.340	0.344	0.348	0.351	0.355	0.359	0.363
140	0.363	0.366	0.370	0.374	0.378	0.381	0.385	0.389	0.393	0.397	0.400

TYPE R
Platinum
vs
Platinum -13% Rhodium

Temperature in °C. Reference Junction at 0°C

°C	0	1	2	3	4	5	6	7	8	9	10
	THERMOELECTRIC VOLTAGE IN ABSOLUTE MILLIVOLTS										
0	0.000	0.005	0.011	0.016	0.022	0.027	0.033	0.038	0.044	0.050	0.055
10	0.055	0.061	0.067	0.072	0.078	0.084	0.090	0.095	0.101	0.107	0.113
20	0.113	0.119	0.125	0.131	0.137	0.142	0.148	0.154	0.161	0.167	0.173
30	0.173	0.179	0.185	0.191	0.197	0.203	0.210	0.216	0.222	0.228	0.235
40	0.235	0.241	0.247	0.254	0.260	0.266	0.273	0.279	0.286	0.292	0.299
50	0.299	0.305	0.312	0.318	0.325	0.331	0.338	0.345	0.351	0.358	0.365
60	0.365	0.371	0.378	0.385	0.391	0.398	0.405	0.412	0.419	0.425	0.432
70	0.432	0.439	0.446	0.453	0.460	0.467	0.474	0.481	0.488	0.495	0.502
80	0.502	0.509	0.516	0.523	0.530	0.537	0.544	0.551	0.558	0.566	0.573
90	0.573	0.580	0.587	0.594	0.602	0.609	0.616	0.623	0.631	0.638	0.645
100	0.645	0.653	0.660	0.667	0.675	0.682	0.690	0.697	0.704	0.712	0.719
110	0.719	0.727	0.734	0.742	0.749	0.757	0.764	0.772	0.780	0.787	0.795
120	0.795	0.802	0.810	0.818	0.825	0.833	0.841	0.848	0.856	0.864	0.872
130	0.872	0.879	0.887	0.895	0.903	0.910	0.918	0.926	0.934	0.942	0.950
140	0.950	0.957	0.965	0.973	0.981	0.989	0.997	1.005	1.013	1.021	1.029

TYPE S
Platinum
vs
Platinum -10% Rhodium

Table 4-3. Thermocouple Reference Tables (cont.)

Temperature in °F, Reference Junction at 32°F

THERMOELECTRIC VOLTAGE IN ABSOLUTE MILLIVOLTS

°F	0	1	2	3	4	5	6	7	8	9	10
0	−0.092	−0.089	−0.086	−0.084	−0.081	−0.078	−0.075	−0.073	−0.070	−0.067	−0.064
10	−0.064	−0.061	−0.058	−0.056	−0.053	−0.050	−0.047	−0.044	−0.041	−0.038	−0.035
20	−0.035	−0.033	−0.030	−0.027	−0.024	−0.021	−0.018	−0.015	−0.012	−0.009	−0.006
30	−0.006	−0.003	0.000	0.003	0.006	0.009	0.012	0.015	0.018	0.021	0.024
40	0.024	0.027	0.030	0.033	0.037	0.040	0.043	0.046	0.049	0.052	0.055
50	0.055	0.058	0.062	0.065	0.068	0.071	0.074	0.077	0.081	0.084	0.087
60	0.087	0.090	0.093	0.097	0.100	0.103	0.106	0.110	0.113	0.116	0.119
70	0.119	0.123	0.126	0.129	0.133	0.136	0.139	0.142	0.146	0.149	0.152
80	0.152	0.156	0.159	0.163	0.166	0.169	0.173	0.176	0.179	0.183	0.186
90	0.186	0.190	0.193	0.197	0.200	0.203	0.207	0.210	0.214	0.217	0.221
100	0.221	0.224	0.228	0.231	0.235	0.238	0.242	0.245	0.249	0.252	0.256
110	0.256	0.259	0.263	0.266	0.270	0.274	0.277	0.281	0.284	0.288	0.291
120	0.291	0.295	0.299	0.302	0.306	0.309	0.313	0.317	0.320	0.324	0.328
130	0.328	0.331	0.335	0.339	0.342	0.346	0.350	0.353	0.357	0.361	0.365
140	0.365	0.368	0.372	0.376	0.379	0.383	0.387	0.391	0.394	0.398	0.402

TYPE S
Platinum vs Platinum -10% Rhodium

Temperature in °C, Reference Junction at 0°C

THERMOELECTRIC VOLTAGE IN ABSOLUTE MILLIVOLTS

°C	0	1	2	3	4	5	6	7	8	9	10
−40	−1.475	−1.510	−1.544	−1.579	−1.614	−1.648	−1.682	−1.717	−1.751	−1.785	−1.819
−30	−1.121	−1.157	−1.192	−1.228	−1.263	−1.299	−1.334	−1.370	−1.405	−1.440	−1.475
−20	0.757	0.794	0.830	0.867	0.903	0.940	0.976	1.013	1.049	1.085	1.121
−10	0.383	0.421	0.458	0.496	0.534	0.571	0.608	0.646	0.683	0.720	0.757
0	0.000	0.039	0.077	0.116	0.154	0.193	0.231	0.269	0.307	0.345	0.383
0	0.000	0.039	0.078	0.117	0.156	0.195	0.234	0.273	0.312	0.351	0.391
10	0.391	0.430	0.470	0.510	0.549	0.589	0.629	0.669	0.709	0.749	0.789
20	0.789	0.830	0.870	0.911	0.951	0.992	1.032	1.073	1.114	1.155	1.196
30	1.196	1.237	1.279	1.320	1.361	1.403	1.444	1.486	1.528	1.569	1.611
40	1.611	1.653	1.695	1.738	1.780	1.822	1.865	1.907	1.950	1.992	2.035
50	2.035	2.078	2.121	2.164	2.207	2.250	2.294	2.337	2.380	2.424	2.467
60	2.467	2.511	2.555	2.599	2.643	2.687	2.731	2.775	2.819	2.864	2.908
70	2.908	2.953	2.997	3.042	3.087	3.131	3.176	3.221	3.266	3.312	3.357
80	3.357	3.402	3.447	3.493	3.538	3.584	3.630	3.676	3.721	3.767	3.813
90	3.813	3.859	3.906	3.952	3.998	4.044	4.091	4.137	4.184	4.231	4.277

TYPE T
Copper vs Copper - Nickel

Temperature in °F, Reference Junction at 32°F

THERMOELECTRIC VOLTAGE IN ABSOLUTE MILLIVOLTS

°F	0	1	2	3	4	5	6	7	8	9	10
0	−0.674	−0.654	−0.633	−0.613	−0.592	−0.571	−0.550	−0.529	−0.509	−0.488	−0.467
10	−0.467	−0.446	−0.425	−0.404	−0.383	−0.362	−0.341	−0.320	−0.299	−0.277	−0.256
20	−0.256	−0.235	−0.214	−0.193	−0.171	−0.150	−0.129	−0.107	−0.086	−0.064	−0.043
30	−0.043	−0.022	0.000	0.022	0.043	0.065	0.086	0.108	0.130	0.151	0.173
40	0.173	0.195	0.216	0.238	0.260	0.282	0.303	0.325	0.347	0.369	0.391
50	0.391	0.413	0.435	0.457	0.479	0.501	0.523	0.545	0.567	0.589	0.611
60	0.611	0.634	0.656	0.678	0.600	0.722	0.745	0.767	0.789	0.812	0.834
70	0.834	0.857	0.879	0.902	0.924	0.947	0.969	0.992	1.014	1.037	1.060
80	1.060	1.082	1.105	1.128	1.151	1.173	1.196	1.219	1.242	1.265	1.288
90	1.288	1.311	1.334	1.357	1.380	1.403	1.426	1.449	1.472	1.495	1.518
100	1.518	1.542	1.565	1.588	1.611	1.635	1.658	1.681	1.705	1.728	1.752
110	1.752	1.775	1.799	1.822	1.846	1.869	1.893	1.917	1.940	1.964	1.988
120	1.988	2.011	2.035	2.059	2.083	2.107	2.131	2.154	2.178	2.202	2.226
130	2.226	2.250	2.274	2.298	2.322	2.347	2.371	2.395	2.419	2.443	2.467
140	2.467	2.492	2.516	2.540	2.565	2.589	2.613	2.638	2.662	2.687	2.711

4-21. Thermocouple Calibration Output Verification

This procedure checks the range of the CALIBRATION OUTPUT section (thermocouple simulator) of the temperature section of the 2590FTS.

1. Connect the thermocouple input to a 5-1/2 digit multimeter as shown in Figure 4-2. Set the voltmeter to volts dc, 200 mV range.

2. Press the correct button to select the 2590FTS T/C input that is connected to the multimeter.

3. Depress the Calibration Output pushbutton to enable CALIBRATION OUT; select K-type thermocouple, °F.

4. Rotate the CAL/OUT Fine and Coarse controls fully counter-clockwise. Verify a voltmeter reading of -10 mV or more negative and a UUT temperature display of -0.L °F .

5. Verify that the thermometer display varies between -10 mV and +90 mV as the Fine and Coarse controls are rotated clockwise.

6. Rotate the CAL/OUT Fine and Coarse controls fully clockwise. Verify a voltmeter reading of at least +90 mV and a UUT temperature display of 0.0°C + .2 °C.

7. Release the Calibration Output pushbutton to the out position to enable EXTERNAL IN. Verify that the thermometer displays "0.C".

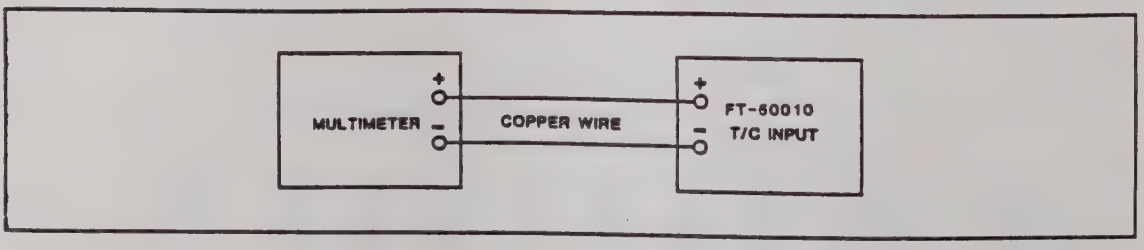

Figure 4-2. Calibrator Output Verification

4-22. Multimeter Verification

Use the following procedures to verify proper operation of the 2590FTS multimeter section.

4-23. MULTIMETER DISPLAY TEST

1. Turn the 2590FTS power on.
2. In the multimeter, select Kohm function, 2000 kohm range.
3. In the multimeter input select section, press EXT INPUT.
4. Verify that the multimeter displays an overrange indication (a "1" followed by three blank digits).
5. Select the DC volts function.
6. Verify that the multimeter displays "000".
7. Place a short across the V/Kohm/S and COMMON external input terminals.
8. Select each range in sequence starting with the 200 mV range. Verify that the decimal point location agrees with Table 4-4 (and that the reading is 0 ± 1 count).
9. Connect the HI output of the meter calibrator to the multimeter external input COMMON. Connect the LO output of the calibrator to the V/Kohm/S external input. In the multimeter section, select the 20V range.
10. Program the calibrator for an output of 11.11V. Verify that the display reads -11.11 (adjust the least significant digit of the calibrator if necessary).
11. Program the calibrator for outputs of 12.22V, 16.66V, and 18.88V. Verify that each output is properly displayed, and that there are no missing or shorted segments or ghosting (ghosting is when elements are barely visible when they are not supposed to be visible at all).

RANGE	LCD DISPLAY
200 mV	00.0
2V	.000
20V	0.00
200V	00.0
1000V	000

Table 4-4. Decimal Point Location (Multimeter)

4-24. RESISTANCE/CONDUCTANCE TEST

1. Connect a short across the V/Kohm/S ext. input terminals.
2. In the multimeter, select Kohm function, 200 ohm range.
3. Verify a multimeter reading of 00.0 to 00.4 ohm.
4. Remove the short from the multimeter external input.
5. Select the conductance function, 200 nS range.
6. Verify a multimeter reading of 00.0 to 00.3.
7. Connect the meter calibrator to the 2590FTS multimeter V/Kohm/S and COMMON external inputs.
8. Refering to Table 4-5, select the proper multimeter range and calibrator output and verify proper display for each step.
9. *200 ohm range accuracy. To compensate for lead resistance and calibrator internal resistance, set the 5100B to output one ohm and note the reading on the A21-50 multimeter. Using the edit controls on the 5100B adjust the 5100B to indicate the same reading as the A21-50. Press the 'NEW REF' button on the 5100B. Set the 5100B to 100 ohm output. Adjust the edit control to match the 5100B display to the A21-50 display. The percentage error indicated by the 5100B should be between +0.3% and -0.3%. Continue with the verification steps listed below.

STEP	RANGE	CALIBRATOR OUTPUT	DISPLAY READING
1	200 ohm	100 ohm	99.7 to 100.3
2	2 kohm	1 kohm	.997 to 1.003
3	20 kohm	10 kohm	9.97 to 10.03
4	200 kohm	100 kohm	99.7 to 100.3
5	2000 kohm	1 Mohm	994 to 1006
6	20 Mohm	10 Mohm	9.94 to 10.06
7	2 mS	1 kohm	0.997 to 1.003
8	20 uS	100 kohm	9.97 to 10.03
9	200 nS	10 Mohm	90.0 to 102.0

Table 4-5. Resistance/Conductance Test

4-25. DC VOLTAGE TEST

CAUTION

TO AVOID EXCEEDING THE INSTRUMENT'S COMMON MODE LIMITS, BE CAREFUL TO MAKE THE INPUT CONNECTION AS DESCRIBED BELOW.

1. Connect the HI output of the meter calibrator to the V/Kohm/S multimeter input. Connect the calibrator LO output to the multimeter COMMON input.

2. In the multimeter section, select the DC Volts function.

3. Refering to Table 4-6, select the proper multimeter range and meter calibrator output and verify proper display for each step.

STEP	RANGE	CALIBRATOR OUTPUT	DISPLAY
1	20 mV	+190.0 mV	+189.7 to +190.3
2	2V	+1.900V	+1.897 to +1.903
3	20V	+19.00V	+18.97 to +19.03
4	20V	-19.00V	-18.97 to -19.03
5	200V	+190.0V	+189.7 to +190.3
6	1000V	+1000V	+998 to +1002

Table 4-6. DC VOLTAGE TEST

4-26. AC VOLTAGE TEST

CAUTION

TO AVOID EXCEEDING THE INSTRUMENT'S COMMON MODE LIMITS, BE CAREFUL TO MAKE THE INPUT CONNECTION AS DESCRIBED BELOW.

1. Connect the HI output of the meter calibrator system to the V/Kohm/S multimeter external input. Connect the LO output of the calibrator to multimeter external input COMMON.

2. In the 2590FTS multimeter, select the ACV function.

3. Refering to Table 4-7, select the multimeter range and calibrator output, and verify proper display for each step.

STEP	RANGE	CALIBRATOR LEVEL	CALIBRATOR FREQ	DISPLAY READING
1	200mV	190.0mV	100 Hz	188.8 to 191.2
2	200mV	10.0mV	100 Hz	9.8 to 10.2
3	2V	1.900V	100 Hz	1.888 to 1.912
4	20V	19.00V	100 Hz	18.88 to 19.12
5	200V	190.0V	100 Hz	188.8 to 191.2
6	750V	750V	100 Hz	744 to 756
7	750V	250V	1 kHz	247 to 253
8	20V	1.00V	10 kHz	0.97 to 1.03
9	20V	19.00V	10 kHz	18.79 to 19.21
10	200V	110.0V	10 kHz	108.7 to 111.3
11	20V	19.00V	20 kHz	18.47 to 19.53

Table 4-7. AC Voltage Test

4-27. DC CURRENT TEST

1. Connect the HI output of the meter calibrator to the mA external input of the multimeter. Connect the calibrator LO output to the multimeter external input common.

2. In the 2590FTS multimeter section, select the DC mA function.

3. Referring to Table 4-8, select the proper multimeter range and calibrator output, and verify proper display for each step.

STEP	RANGE	CALIBRATOR OUTPUT	DISPLAY READINGS
1	200 uA	190.0 uA	189.3 to 190.7
2	2 mA	1.900 mA	1.893 to 1.907
3	20 mA	19.00 mA	18.93 to 19.07
4	200 mA	190.0 mA	189.3 to 190.7
5	2000 mA	1900 mA	1893 to 1907

Table 4-8. DC mA TEST

4-28. AC CURRENT TEST

1. Connect the HI output of the meter calibrator to the mA external input of the multimeter. Connect the calibrator LO output to the multimeter external input common.

2. In the 2590FTS multimeter section, select the AC mA function, 200 uA range.

3. Program the multimeter calibrator for an output level of 190.0 uA at a frequency of 1 kHz.

4. Verify a multimeter display between 189.7 and 192.1 uA.

4-29. **Frequency Counter Verification**

Use the following procedure to verify operation of the 2590FTS frequency counter section.

1. Select External Frequency No. 1 in the 2590FTS Audio Frequency Section.

2. Connect the output of the signal generator (Fluke 6011 or equivalent) to the External Frequency No. 1 input connector on the 2590FTS.

3. Select External Frequency No. 1 in the Multimeter Input Select section.

4. Select AC Volts, 200 mV range in the Multimeter section.

5. Set the counter Threshold Adjust control fully counterclockwise.

6. Adjust the signal generator for an output of 25 kHz. Using the 2590FTS multimeter as a reference, adjust the output amplitude to 75 mV.

7. Verify a frequency counter reading of 25000 Hz $\pm$ 2 Hz.

8. Verify that the counter stops counting the input signal as the Threshold Adjust is rotated clockwise. Return the Threshold Adjust to its fully counter clockwise position.

9. Repeat steps 5 and 6 for frequencies of 50 kHz and 99 kHz.

10. Adjust the signal generator for an output frequency of 101 kHz. Verify that the 2590FTS frequency counter indicates an overflow condition (0.0.0.0.0 Hz).

11. Select External Frequency No. 2 in the Audio Frequency and Multimeter Input Select sections.

12. Connect the signal generator output to the External Frequency No. 2 input. Repeat steps 5 through 9 and verify proper 2590FTS counter readings.

4-30. Frequency Source Verification

Use the following procedure to verify operation of both frequency source sections of the 2590FTS.

1. Select Frequency Source 1 in the Audio Frequency Signal Select section. (These steps are later repeated for Frequency Source 2).

2. Connect a 600 ohm, ±12 ohm, 4 watt resistive load across the output of the A21-50 frequency source that is to be tested.

3. Sine Wave: Select the sine function.

4. AC Amplitude:

   a. Press the multimeter input switch for the frequency source under test (FREQ 1 or FREQ 2), and select AC Volts, 200V range.

   b. To measure the ac amplitude under worst-case loading, pull out the DC Offset control and set it for an offset of -18.1V.

   c. Verify that the frequency source can be adjusted for an amplitude of 20.1V RMS (+0.2, -0.0V RMS) and a frequency of at least 15000 Hz. Perform this verification without the 'scope attached to the load; its capacitive load may give a false reading (too high or too low). Leave the source at these settings for the DC Offset test.

   d. Connect a 'scope to the output and check that the waveform is clean. (When observing the square wave, note that it is expected to have rounded leading edges at 15 kHz). Disconnect the 'scope before proceeding.

5. DC Offset:

   a. In the multimeter section, select DC Volts, 200V range.

   b. With the DC Offset control pulled out, turn it counter clockwise to produce a UUT multimeter display of -18.1V or more negative. Be sure you are performing this test with the AC amplitude at 20.0V RMS, 15 kHz (as set in step 4.c.), for worst-case loading.

   c. Rotate the DC Offset control fully clockwise. Verify a UUT multimeter display of +18.0V or greater.

   d. Short the output for 10 seconds (maximum of 1 minute). Remove short and verify both AC output and DC Offset return to normal values.

6. Square Wave: Repeat steps 4 and 5 with the square wave selected.

7. Repeat steps 3-6 but with the frequency source adjusted to 50 Hz in steps 4.c. and 5.b. (and same amplitude as before).

8. With the square wave selected and the DC Offset defeated (pushed in), set the frequency to 40 Hz (and the same 20V RMS amplitude). Connect a 'scope and verify the duty cycle is 50% ± 5%.

9. Select Frequency Source 2 and repeat steps 2-8 for this other source.

4-31. DC Voltage Source Verification

Use the following procedure to verify proper operation of both of the 2590FTS dc voltage source (DC Volts Out) sections. Note: The dc voltage sources do not require calibration.

1. Connect a 25 ohm ,5%,10 watt resistor (JF P/N 733469) to the DC Volts Source output and press the multimeter input select switch for DC Volts Out #1 or #2.

2. 1V Range:

   a. In DC Volts Source section, select the 1V range.

   b. In the multimeter, select DC volts, 2V range.

   c. Verify that the Coarse and Fine controls can adjust the DC Volts Out to $\geq$ 1V maximum and $\leq$ 0.0 mV minimum.

3. 10V Range:

   a. In DC Volts Source section, select the 10V range.

   b. In the multimeter, select the 20V range.

   c. Verify the controls can adjust the DC Volts Out to $\geq$ 10V maximum and $\leq$ 0.0V minimum.

4. Short-Circuit Current:

   a. Measure the short-circuit current from the DC Volts Out with the UUT multimeter by connecting the external mA input terminals across the load (HI of DC Volts Out to mA terminal of multimeter, and LO to COM).

   b. In the multimeter, select DC mA, 2000 mA range.

   c. With the DC Volts Out set to 5V or greater, verify a multimeter reading of less than 600 mA.

5. Repeat steps 1-4 for No. 2 DC Volts Source.

4-32. DC Current Source Verification

Use the following procedure to verify proper operation of the 2590FTS current source (DC mA Out) section. Note: The current source requires no calibration.

1. Connect a 280 ohm ($\pm$ 3 ohm), 8 watt resistor across the DC mA Out outputs. (This high wattage is necessary to keep the temperature coefficient low, so the resistor value will not increase appreciably as it heats up.)

2. 1 mA Range:

   a. Select the 1 mA range in the DC mA Out section.

   b. Select DC mA Out in the multimeter input select section.

   c. In the 2590FTS multimeter, select DC mA, 2 mA range.

   d. Verify that the current source can be adjusted for an output of at least 1.000 mA.

3. 100 mA Range:

   a. Select the 200 mA range in the multimeter section.

   b. Select the 100 mA range in the DC mA Out section.

c. Verify that the current source can be adjusted for an output greater than 100.0 mA.

NOTE

If the output cannot be adjusted to at least 100 mA, verify that the load resistor is within tolerance (277 to 283 ohms) when it is warm.

4. Short-Circuit Regulation:

a. Adjust the DC mA Out for 100.0 mA (+0.2, -0.0 mA).

b. Connect a short across the load resistor. Verify that the reading does not change by more than 0.2 mA.

4-33. Relay Timer Verification

Use the following procedure to verify proper operation of the 2590FTS relay timer section. (The factory uses a Time-Delay Relay test box to verify proper operation.)

1. Construct a relay timer test cable as follows:

a. Terminate one end of each of four 20 inch lengths of No. 24 stranded wire to one of the four terminals of a relay timer mating connector (JF P/N 643791).

b. Connect the open end of the wire from pin "A" of the mating connector to the (+) side of a dual banana connector.

c. Connect the open end of the wire from pin "D" to the common (-) side of the dual banana connector.

d. Connect a 600 ohm, 4 watt resistor across the pins of this banana connector.

e. Connect the remaining two wires (from "B" & "C") across a normally open SPST, momentary pushbutton switch.

2. Connect the timer test cable to the panel connector in the 2590FTS relay timer section.

3. Connect the dual banana connector between the V/kohms and common terminals in the multimeter external input section.

4. Select EXT input in the multimeter input select section.

5. Select the DC volts function, 200V range in the multimeter section.

6. Select the DELAY PICK UP mode in the relay timer section.

7. Depress the ARM pushbutton.

8. Depress the START pushbutton. Verify that the 2590FTS multimeter reads between 20 and 34V dc. Verify that the timer starts to count.

9. Depress the pushbutton on the timer test cable. Verify that the timer stops counting while the button is depressed.

10. Release ARM and START pushbuttons.

11. Select the DELAY DROP OUT mode.

12. Depress the ARM switch. Verify that the 2590FTS multimeter reads between 20 and 34V dc.

13. Depress the pushbutton on the timer test cable and hold it in.

14. Depress the START pushbutton. Verify that the multimeter reads 00.0V dc. Verify that the timer starts to count.

15. Release the pushbutton on the timer test cable. Verify that the timer stops counting.

16. Release the START pushbutton. Verify that the timer reads "000.0".

4-34. CALIBRATION

4-35. The following procedures should be used for calibrating the 2590FTS. These calibration tests are performed with the instrument removed from the carrying case so that the calibration adjustments are accessible. Make sure, however, that the bottom shield is properly installed on the bottom of the main circuit board. All tests should be conducted with an ambient temperature of 25 °C ± 2 °C.

Refer to Table 4-1 for the list of required equipment. Figure 4-3 shows the outline of the main circuit board including test point locations.

4-36. Multimeter Volts Calibration

The following procedure should be used for calibrating the multimeter volts (DC and AC) section of the 2590FTS.

A. DC Volts Calibration

1. In the multimeter input select section of the 2590FTS, select the multimeter External Input.

2. In the multimeter section, select DC volts, 2 volt range.

3. Connect the HI output of a meter calibrator (Fluke 5100B or similar) to the multimeter external V/kohm input. Connect the LO of the calibrator to the multimeter common input.

4. Adjust the calibrator output to 1.9000V dc. Adjust R204 in the 2590FTS for a multimeter display of exactly 1.900.

5. Reverse the polarity of the calibrator output. Verify a multimeter display of -1.900 ± 2 counts.

B. AC Volts Calibration

1. In the multimeter section of the 2590FTS select the AC volts function, 2 volt range.

2. Adjust R221 in the multimeter section to the center of its range.

3. Adjust the meter calibrator for an output of 1.900V at 100 Hz. Adjust R219 for a multimeter display of exactly 1.900 when the front panel is closed.

4. Adjust the calibrator for an output of 190.0 mV at 100 Hz. Adjust R221 for a multimeter display of exactly .190 (in the same 2V range).

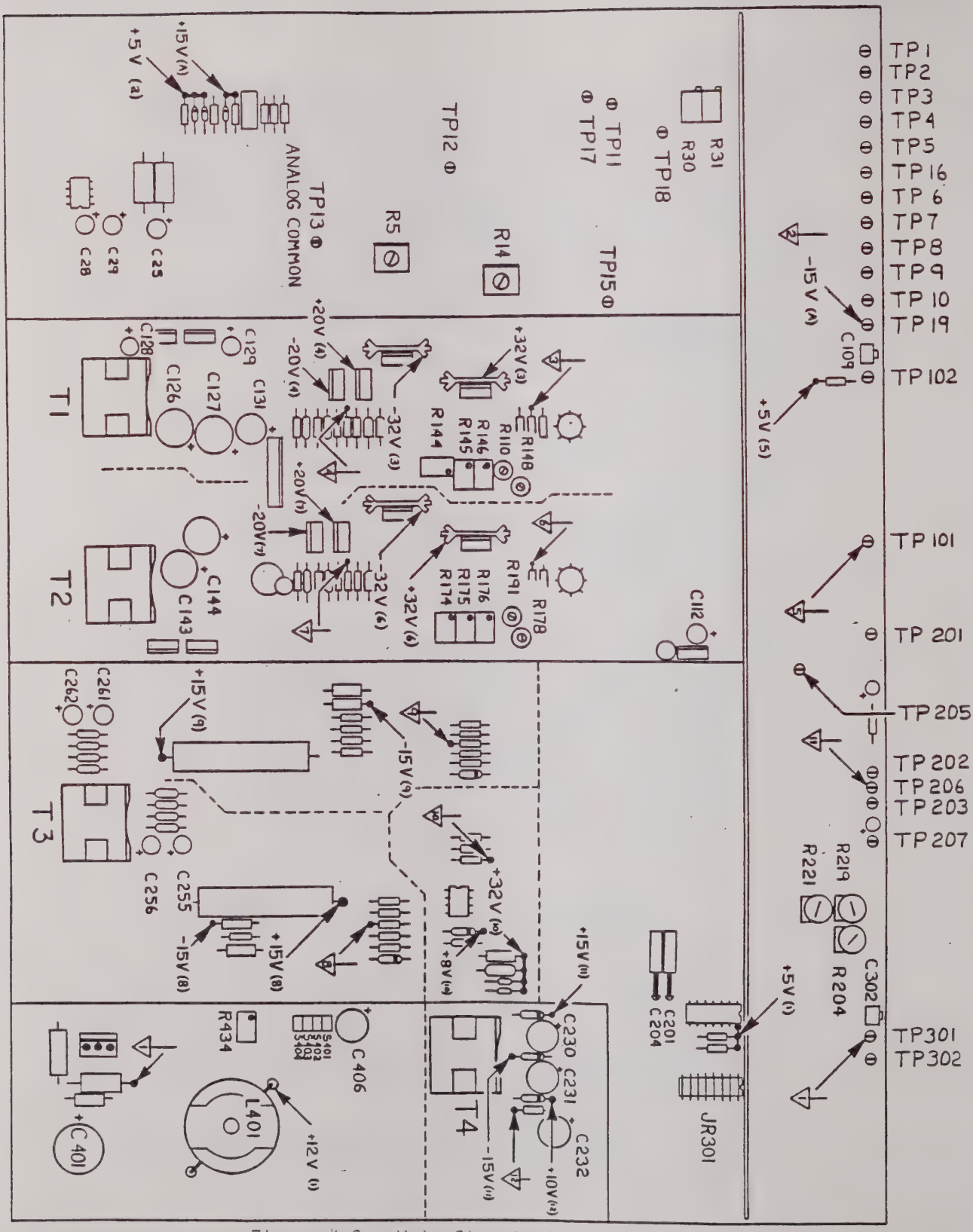

Figure 4-3. Main Circuit Board Test Point/Cal Locations

5. Repeat steps 3 and 4 until both readings are correct within 1 count.

6. Select the 20V range in the multimeter section.

7. Set the meter calibrator for an output of 19.00V at 10 kHz. Adjust C201 for a multimeter display of 19.00 with front panel closed.

8. Select the 200V range.

9. Set the meter calibrator for an output of 110.0V at 10 kHz. Adjust C204 for a multimeter display reading of 110.0 with front panel closed.

4-37. Frequency Counter Calibration

The following procedure should be used for calibrating the frequency counter section of the 2590FTS.

1. Make sure the frequency counter shield is in place when this calibration is performed. This is the shield which covers components R102 - R106, among others.

2. Connect the frequency generator to the EXT. 1 input and adjust it for 90 kHz, 5V RMS. Press the EXTERNAL 1 push button (below the counter display).

3. Adjust C109 for the UUT counter reading of 90000 Hz.

4. Adjust the input to 100 Hz at 5V RMS.

5. Verify that the UUT counter display reads 100 Hz $\pm$ 1 Hz.

6. Apply 110 kHz at 5V RMS.

7. Verify that the UUT reads overflow (0.0.0.0.0 Hz).

4-38. Frequency Source Calibration

NOTE

Calibration of the frequency sources should be performed after calibration of the multimeter and frequency counter sections.

The following procedure should be used to calibrate both frequency sources in the 2590FTS. Each component designator refers to Frequency Source No. 1, followed by a number enclosed in parentheses which refers to Frequency Source No. 2. Example: R145 (175).

1. Set-Up

   a. Connect a 600 ohm, ± 12 ohm, 4 watt resistor across the frequency source output.

   b. Connect an oscilloscope across the 600 ohm load on the source under test.

2. 50% Duty Cycle

   a. On the A21-50 front panel select the square wave function.

   b. Just below the frequency display, select the frequency source under test (#1 or #2).

   c. Adjust the frequency source for an output frequency of 40 Hz ± 2 Hz (as displayed on the A21-50 frequency counter).

   d. Adjust the frequency source amplitude for a 20 Volt peak to peak square wave as displayed on the oscilloscope.

   e. At 40 Hz: Adjust R110 (191) for an output duty cycle of 50% ± 1%. (Notice the trimmer varies the length of the lower half-cycle of the square wave, but not the length of the upper half-cycle.) On the first attempt, it may not be possible to trim the waveform to 50%. If this happens, the other duty cycle adjustment (at 1 kHz) is too far out of adjustment, so go on to step f.

   f. At 1 kHz: Adjust the frequency source for an output frequency of 1000 ± 10 Hz (same amplitude of 10.0V RMS).

   g. At 1 kHz: Adjust R146 (176) for an output duty cycle of 50% + 1%. Doing this will affect the duty cycle at 40 Hz, so the next step is important.

h. Alternate between 40 Hz and 1 kHz, adjusting (or checking) the duty cycle until they are both at 50% ± 1%.

i. In the Multimeter Select Section select the frequency source under test. In the Multimeter Section, select 200V AC range and function.

j. Adjust the frequency source for a 60 Hz ± 2 Hz square wave at 20V RMS ± 0.2V.

k. Select 20V DC range and function. Pull out DC Offset and check for span of at least -18.0V to +18.0V. (Note: some rattle in the frequency display is normal with DC Offset at or below -18.1 V.)

4. Distortion Adjustment. The purpose here is to adjust the sine wave distortion controls to match its shape to that of a true sine wave.

a. Display a true sine wave either by displaying it on the 'scope from an external generator (Fluke 6011A, or equivalent, set to 1 kHz, 10V RMS), or by a graticule overlay (where the sine wave is simply drawn on the screen).

b. Set the A21-50 frequency source under test to its sine wave output, approximately 1 kHz, 10V RMS. Adjust the 'scope so this signal is superimposed over the true sine wave.

c. Adjust R145 (175) and R144 (174) to match the waveforms, especially making sure the positive peak is the same amplitude as the negative peak.

5. Square Wave Amplitude Adjustment

a. Select the square wave function. Adjust the frequency source Amplitude to maximum, and frequency to 15000 Hz ± 100 Hz. Adjust R148 (178) until the square wave output amplitude is 21.0 ± 0.2V RMS (also as measured by the A21-50 multimeter in the AC volt 200V range).

b. Turn on (pull out) the DC Offset knob and turn it fully CCW and fully CW. Verify that the square wave amplitude stays at or above 20.0V RMS with the 620 ohm load.

4-39. Thermometer Calibration

The following procedure should be used for calibrating the thermometer section of the 2590FTS.

A. A/D Calibration

1. Turn Frequency Source #1 and #2 amplitudes down all the way (to reduce interference). Set temperature switch to °F. Set the T/C signal select for External Input. With instrument power off, connect a jumper wire between TP9 (linear pin of U4) and TP19 (digital common, -15V).

2. Turn power back on and allow the 2590FTS to stabilize for 5 minutes.

3. Connect equipment as shown in the following figure using input module T/C #1 (actually, either one will do). Press the T/C #1 pushbutton. Observe proper polarity.

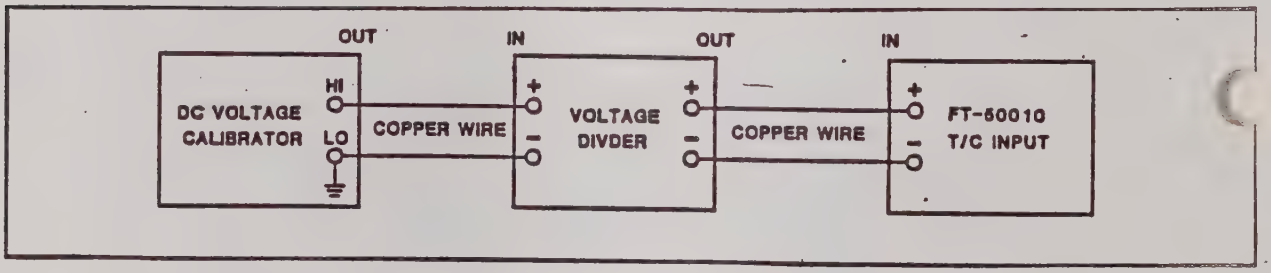

Figure 4-4. Thermometer A/D Calibration

4. Adjust the calibrator (.001V) and voltage divider (+100:1) for a thermometer input of +10 uV. Note the resulting temperature display.

5. Reverse the polarity of the input and again observe the display. Adjust zero potentiometer, R31 until the two readings are equal (and read approximately 1.0 °F) except for the negative sign. (Clockwise rotation makes the +100:1 reading smaller and the -100:1 reading larger, ignoring the sign.)

6. Again source +10 uV. Adjust R14 for a display of 1.0. Reverse input polarity and verify a display of -1.0 ± 0.1 °F.

7. Adjust the calibrator (1.9V) and voltage divider (-100:1) for a thermometer input of -19.000 mV. Adjust -FS potentiometer, R30 for a display of -1900.0 exactly.

8. Source +19.000 mV. Verify a thermometer display of 1900.0 ± 2-1/2 counts.

9. Adjust the calibrator (9.9V) and voltage divider (+100:1) for a thermometer input of +99.000 mV. Verify a display of 9900 ± 1 count. Reverse input polarity and verify a display of -9900 ± 1 count.

10. Remove the jumper wire from TP9 and TP19.

B. Reference Junction Divider Network Calibration

CAUTION

Care should be taken in adjusting the dc calibrator output in the following steps. Excessive calibrator output can damage the reference junction circuitry.

1. Adjust the dc calibrator for an output of 0.0 volts. Use direct output from the calibrator.

2. Connect the (-) output of the calibrator to TP14 (on the T/C switch assembly). Connect the (+) output of the calibrator to TP13.

3. Place a short across the T/C+ and T/C- terminals on T/C #1 input assembly. Select that assembly as the input.

4. Place the select type T/C rotary switch to the K position.

5. Adjust the DC calibrator for an output of .57850 volts. Adjust R5 for a display of exactly 25.0 °C or 77.0 °F.

6. Disconnect the leads from TP13 and TP14. Remove the short from the T/C input.

C. Calibration Output

The Calibration Output has no internal adjustments and hence requires no calibration.

4-40. Thermocouple Input Module Calibration

This procedure assumes the thermometer A/D is already calibrated.

1. Construct an ambient temperature lag bath as follows:

   a. Prepare a thermos type container by drilling two holes in its cap to accept the mercury thermometer and thermocouple wires, or use a standard laboratory cork.

   b. Fill this container with room temperature water.

   c. Replace the cap or cork and insert the thermocouple wires and thermometer as shown in the following figure, allowing the bath to stabilize for at least 30 minutes.

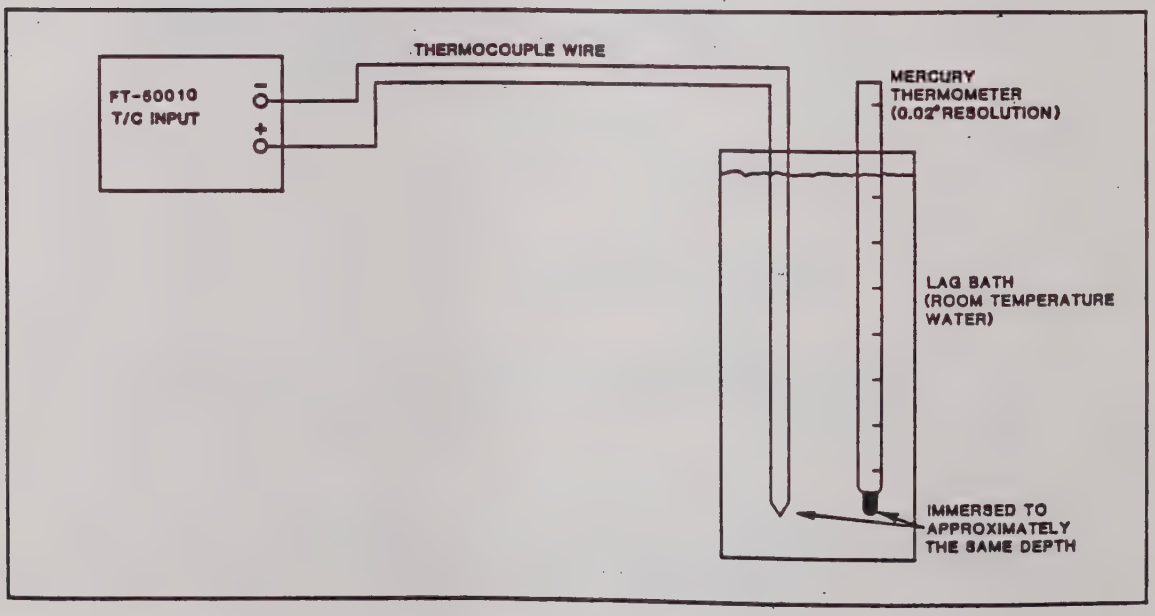

Figure 4-5. Thermocouple Input Module Calibration

2. Connect a K-type thermocouple to one of the T/C (thermocouple) input modules. Immerse the thermocouple probe in a room temperature lag bath as shown in the previous figure.

3. Install the input assembly in the 2590FTS and allow the equipment to stabilize for at least 5 minutes.

4. Set the Type Select rotary switch on the 2590FTS to the K position. Select the °C temperature scale.

5. Read the lag bath temperature using the mercury thermometer. To calibrate the input module, adjust R1 on the input module so the 2590FTS temperature display agrees with the mercury thermometer reading. See section 4-15 if the range of R1 is not sufficient of adjust the input module.

6. Repeat steps 2 through 5 for the other T/C input module.

4-41. Reference Junction Resistor Selection

This section needs to be performed only if the range of R1 from the previous section is not enough to allow the instrument to be calibrated.

NOTE

The following table lists values and part numbers that may be used to replace R3. These are low temperature coefficient metal film resistors. If these values are substituted with parts with a larger temperature coefficient, stability over time may suffer.

VALUE	JOHN FLUKE P/N	VALUE	JOHN FLUKE P/N
49.9k	268821	110k	234708
52.3k	237248	124k	288407
54.9k	271353	140k	289439
57.6k	289116	162k	375998
60.4k	291419	191k	375923
63.4k	235382	237k	288373
68.1k	236828	309k	235283
73.2k	237222	332k	289504
78.7k	289058	464k	271908
84.5k	229492	562k	235358
90.9k	223537	1.05 M	260737
100k	248807	OPEN	--

Table 4-9. REFERENCE JUNCTION BIAS RESISTOR VALUES

1. Remove R3 from the T/C input assembly. Temporarily connect copper wire test lead to TP1 and TP2 on the T/C input module. Connect the test leads to a resistor substitution box as shown in the following figure.

2. Connect a K-type thermocouple to the T/C input assembly and immerse the probe end into a room temperature lag bath as shown in the previous figure.

3. Adjust R1 on the input assembly to the center of its range. Install the input assembly in the 2590FTS and allow the equipment to stabilize for at least 5 minutes.

4. Set the type select rotary switch on the 2590FTS to the K position. Select the °C temperature scale.

5. Read the lag bath temperature using the mercury thermometer. Adjust the resistor substitution box to the value in the above table that yields a 2590FTS temperature display that most nearly matches the lag bath temperature.

6. Disconnect the decade resistor from the T/C input assembly and replace it with a resistor of the value selected.

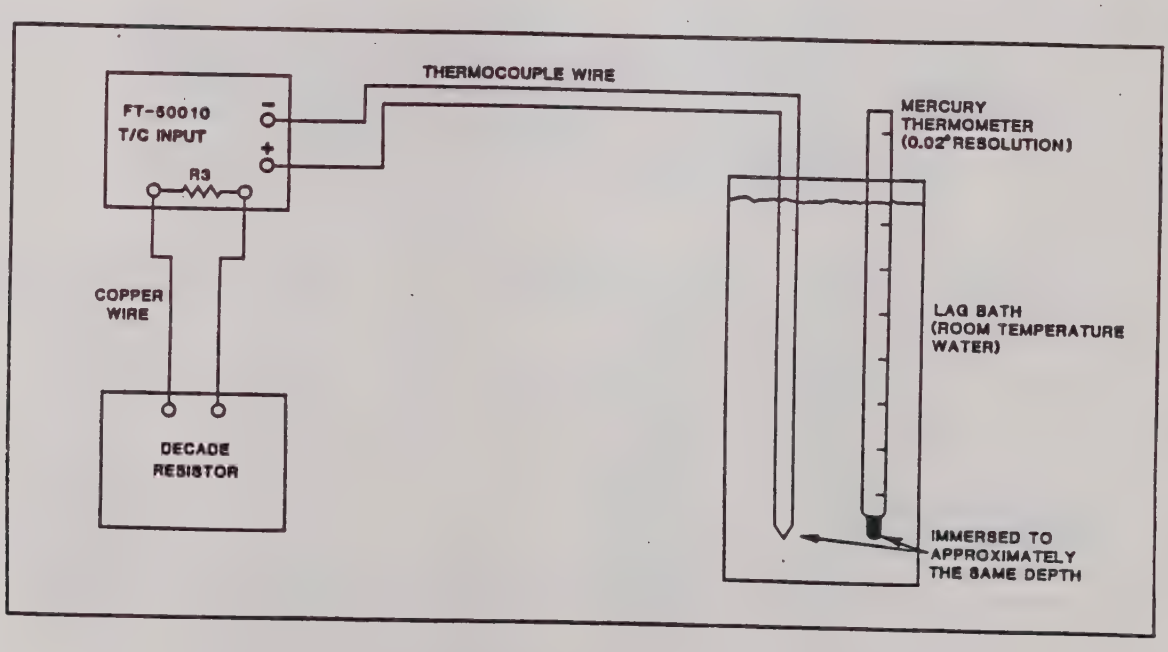

Figure 4-6. Reference Junction Resistor Selection

7. Reconnect the equipment as shown in Figure 4-5, Thermocouple Input Module Calibration. and allow it to stabilize for at least 5 minutes.

8. Adjust R1 on the input assembly so that the 2590FTS temperature display agrees with the mercury thermometer reading.

4-42. Relay Timer Calibration

The following procedure should be used for calibrating the relay timer section of the 2590FTS.

1. In the Relay Timer section of the 2590FTS, connect a frequency counter between testpoints TP301(common) and TP302.

2. Adjust C302 for a counter reading of exactly 100.000 msec.

4-43. TROUBLESHOOTING

This section provides some useful troubleshooting information for the power supply section of the 2590FTS.

The power supply has four transformers, all with a common primary ground. There are a total of 10 secondary grounds. If a group of circuits driven by a single transformer all fail, the fault is probably located in the primary drive circuit for that transformer. (Each transformer has its own primary drive circuit.)

TRANSFORMER	GROUND	CIRCUITRY DRIVEN BY TRANSFORMER
T1	2,3,4	Thermometer Frequency Source #1 LCD 1, for Thermometer
T2	5,6,7	Frequency Source #2 LCD 2, for Audio Frequency
T3	8,9	No. 1 DC Volts Out No. 2 DC Volts Out
T4	10,11	DC mA Out Multimeter LCD 3, for Multimeter
(none)	1	Relay Timer LCD 4, for Relay Timer

NOTE: Ground 1 is on primary side of all transformers. Grounds 2-10 are on secondary sides.

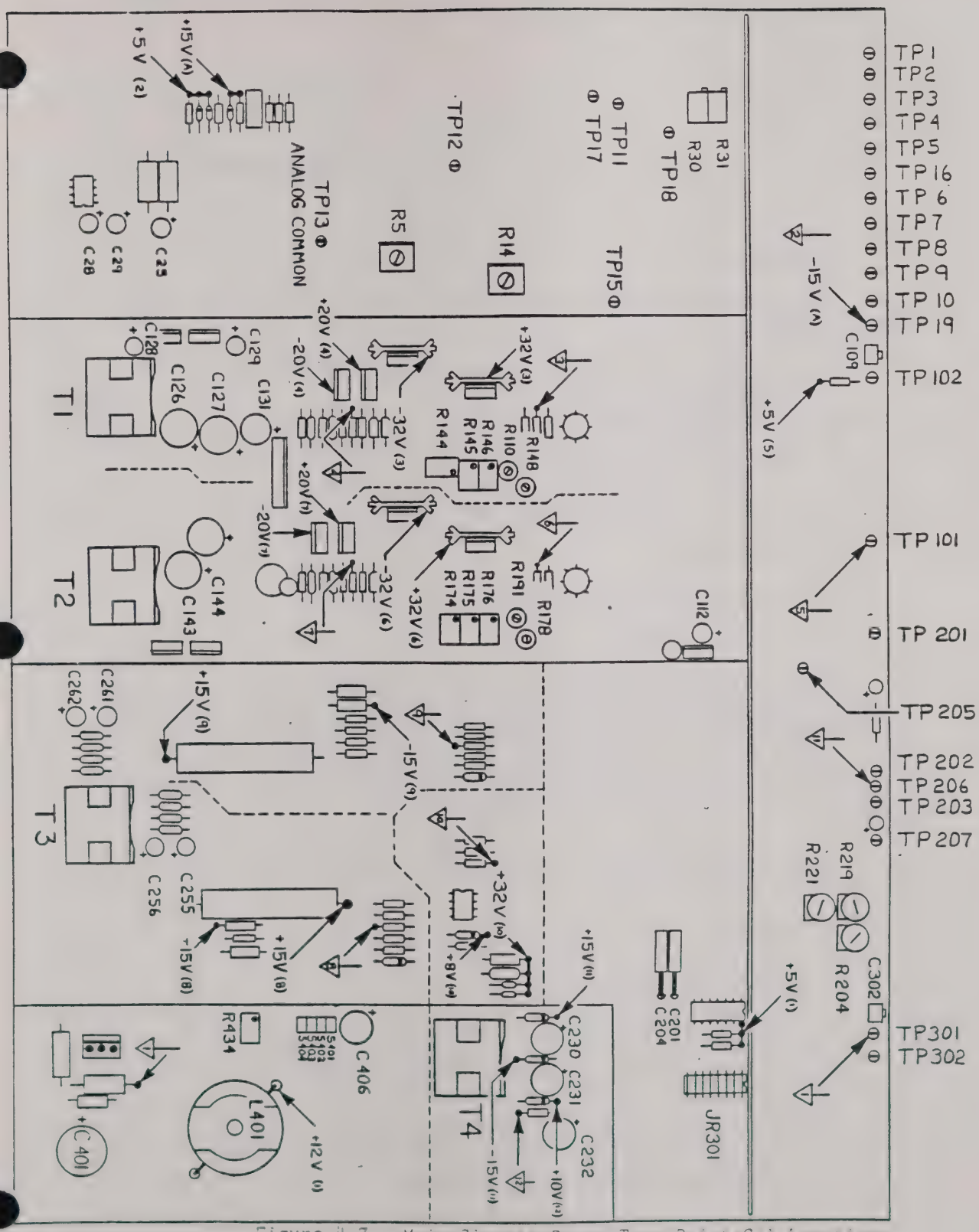

Figure 4-7. Main Circuit Board Test Point/Cal Locations

SECTION 5
LIST OF REPLACEABLE PARTS

5.0 INTRODUCTION

5.1 All components are listed according to the circuit board where they are located.

5.2 Parts lists include the following information:

a. Reference designation

b. Description of each part

c. Fluke part number, class code

d. Item number

e. Total quantity per assembly

5.3 How to Obtain Parts

5.4 Components may be ordered from John Fluke Mfg. Co., Inc. factory or authorized representative by using the FLUKE PART NUMBER. If you can identify the manufacturer by the component markings, you may order the part directly from the manufacturer. In the event the part you order has been replaced by a new or improved part, the replacement will be accompanied by an explanatory note and installation instructions, if necessary.

5.5 To ensure prompt and efficient handling of your order, include the following information:

a. Quantity

b. Fluke Part Number

c. Description of part

d. Printed circuit board part number and revision letter as printed in ink on the circuit board.

e. The reference designation or item number of the part

f. Instrument model and serial number.

FIELD TEST SET

REFERENCE DESIGNATOR A->NUMERICS--->	S	----------DESCRIPTION----------	FLUKE STOCK --NO--	709121 2590FTS MANUFACTURERS PART NUMBER --OR GENERIC TYPE--	TOT QTY	CLASS	GRPITEM
	*	2590A FINAL ASSEMBLY	717595	717595	1	3158	1001
++++		CONN,CIRC,PLUG,4 CONTACT	643791	643791	1	2104	1003
++++		CONN,CIRC,PLUG,3 CONTACT	644005	644005	1	2104	1002

2590A FINAL ASSEMBLY

717595
2590A-5001

REFERENCE DESIGNATOR A->NUMERICS--->		S	----------DESCRIPTION----------	FLUKE STOCK --NO--	MANUFACTURERS PART NUMBER --OR GENERIC TYPE--	TOT QTY	CLASS	GRPITEM
			#8,.169,5/16,41/64,	237172	237172	2	2818	1170
			PLASTIC-FILM, FOR TO-3	306217	306217	1	4840	2226
		*	T/C INPUT ASSY	648634	648634	2	3158	2202
		*	DISPLAY ASSY	648642	648642	1	3158	2203
		*	SW. DECK 3 ASSY	648675	648675	1	3158	2206
		*	MAIN BOARD ASSEMBLY	718403	718403	1	3158	2201
		*	SWITCH DECK 1, ASSY	718619	718619	1	3158	2204
		*	SWITCH DECK 2, ASSY	718627	718627	1	3158	2205
		*	MULTIMETER INPUT ASSY	718635	718635	1	3158	1106
			T/C SELECT ASSY	734889	734889	1	3158	2207
####			CONN,PWB,SOCKET,IDC,SIP,0.100,9 POS	631192	631192	4	2107	1134
####			CONN,PWB,SOCKET,IDC,SIP,0.100,6 POS	631200	631200	2	2107	1133
####			CONN,PWB,SOCKET,IDC,SIP,0.100,4 POS	631218	631218	3	2107	1132
####			CONN,PWB,SOCKET,IDC,SIP,0.100,4 POS	631218	631218	1	2107	2229
####			CONN,CIRC,BOX REC,4 CONTACT	643809	643809	1	2104	1135
####			CONN,CIRC,BOX REC,3 CONTACT	644021	644021	1	2104	1136
####			CONN,REC,FASTON,CRIMP,INSUL,0.187WIDE	655001	RAD20377	2	2108	1129
CR		*	DIODE,SI, 40 PIV, 25.0 AMP	508242	1N6096	1	4802	2218
DS			LED,GREEN,PANEL MT WITH WIRE LEADS	723809	723809	1	4816	1120
E			LUG, SOLDER, 3/8"	441972	761	5	2115	1168
F			FUSE,1/4 X 1-1/4,FAST,2A,250V	109173	109173	1	5101	1126
F			FUSE,1/4 X 1-1/4,FAST,3A,250V	109199	109199	1	5101	1125
FL			SW TRANSIENT, LUG TYPE FILTER 250V/3A	631937	631937	1	2701	2217
H	1		WASHER,NON-TURN,BRASS,0.375 ID	631291	631291	1	2817	1137
H	2		WASHER,LOCK,INTRNL,STEEL,0.267 ID	110817	110817	2	2817	1138
H	3		WASHER,LOCK,INTRNL,STEEL,0.387 ID	129957	1220-05	4	2817	1139
H	4		WASHER,LOCK,INTRNL,STEEL,#8	110320	110320	1	2817	1140
H	5		NUT,METAL 1/4-32 HEX STEEL	110601	110601	2	2808	1141
H	6		NUT,METAL 4-40 CAPTIVE EXT LOCKWASHER	195255	195255	8	2808	1142
H	7		NUT, HEX, 3/8-32	110510	8009NP	2	2808	1143
H	8		SCREW,MACHINE,PHP,STEEL,8-32X1/4	228890	228890	1	2813	1166
H	9		SCREW,MACHINE,PHP SEMS,STEEL,6-32X3/8	177022	177022	1	2813	1167
H	10		WASHER,SHLDR,ISOLATING,D,3/8	745877	745877	10	2817	1169
H	11		WASHER,FLAT,NYLON,.380 ID,.031 TK	745943	745943	4	2817	1171
H	12		NUT,METAL 6-32 HEX STOP NUT	110841	110841	8	2808	2231
H	13		SCREW,MACHINE,PHP SEMS,STEEL,6-32X5/8	272591	272591	2	2813	2232
H	14		NUT,METAL 10-32 HEX STEEL	110536	110536	1	2808	2234
H	15		SCREW,MACHINE,PHP SEMS,STEEL,6-32X3/8	177022	177022	27	2813	2235
H	16		SCREW,MACHINE,PHP SEMS,STEEL,4-40X3/8	281196	281196	1	2813	2236
H	17		SCREW,SHOULDER,RHS,STEEL,8-32X0.285	658088	658088	2	2813	2237

2590A FINAL ASSEMBLY

717595
2590A-5001

REFERENCE DESIGNATOR A->NUMERICS--->	S	----------DESCRIPTION----------	FLUKE STOCK --NO--	MANUFACTURERS PART NUMBER --OR GENERIC TYPE--	TOT QTY	CLASS	GRPITEM
H 18		NYLON PUSH-RIVET W/PRE-DRIVEN PIN BLK	745869	745869	4	2812	2238
H 19		WASHER,FLAT S STEEL,#4,0.032 THK	146225	146225	4	2817	2239
H 20		SCREW,MACHINE,PHP SEMS,STEEL,4-40X1/2	353060	353060	4	2813	2240
H 21		WASHER,FLAT,PHENOLIC,#4,0.063 THK	130021	130021	4	2817	2241
H 22		SCREW,MACHINE,RHS,NYLON,6-32X1/2	115006	115006	6	2813	2242
H 23		WASHER,FLAT,STEEL,#8,0.031 THK	110288	110288	3	2817	2243
H 24		WASHER,FLAT,STEEL,#6,0.031 THK	110270	110270	10	2817	2244
H 25		WASHER,SHLDR,NYLON,#10	295048	295048	1	2817	2252
H 26		WASHER,FLAT,FIBER,#10,0.031 THK	333989	333989	1	2817	2253
H 27		VELCRO FASTENER	722389	722389	2	2806	4402
H 28		SCREW, BLACK, FHP, CR, 10-32X3/4	740449	740449	6	2813	4408
#J		CONN,COAX,BNC,REC,BLKHD	152033	30355-1	3	2106	1131
MP 1		FRONT PANEL	722397	722397	1	3156	1101
MP 2		BUSHING,SWITCH	655480	655480	2	2502	1102
MP 3		KNOB,KNURLED (MOLDED)	487983	487983	14	2405	1107
MP 4		MEDIUM PEWTER MOLDED POINTER KNOB	734939	734939	4	2405	1108
MP 5		BINDING-POST-ASSY-BR-BLK	637850	637850	1	2800	1109
MP 6		BINDING-POST-ASSY-BR-RED	637843	637843	2	2800	1110
MP 7		FUSE HLDR,BODY W/NUT,LOW	460329	460329	2	2102	1127
MP 8		FUSE HLDR,CAP,1/4 X 1-1/4 FUSE	460238	031.1666	2	2102	1128
MP 9		POLYOLEFIN #14 .120ID EXPAND BLK	149450	149450		6014	1156
MP 10		POLYOLEFIN #12 .153ID EXPAND,BLACK	113852	113852		6014	1157
MP 11		SLEEVING .500ID THERMOFIT	196683	196683	3	6014	1158
MP 12		CABLE, NYLON STRAP, 4 IN L, SST-1	172080	172080	34	6006	1161
MP 13		SELF-ADHESIVE,ABMM-1,ABS PLASTIC	407908	407908	12	6006	1162
MP 14		SPACER,RND,NYLON,6-32X0.750	381020	381020	1	2814	1164
MP 15		SPACER,HEX,BRASS,8-32X1/2	721076	721076	1	2814	1165
MP 16		POWER SUPPLY SHIELD	727933	727933	1	3156	2208
MP 17		FRAME ASSY	727958	727958	1	3155	2209
MP 18		INTERNAL SUPPORT BRACKET	727917	727917	2	2803	2210
MP 19		FREQUENCY COUNTER SHIELD	727941	727941	1	3156	2211
MP 20		ISOTHERMAL SUPPORT BRACKET	727925	727925	1	2803	2212
MP 21		MEDIUM PEWTER INPUT DRAWER	734947	734947	2	3155	2213
MP 22		HINGE ARM MODIFIED	651331	651331	2	3156	2214
MP 23		INSULATOR,TRANSISTOR 7403-09FR-51	508630	508630	4	3101	2227
MP 24		CARD-GUIDE	298836	298836	10	3155	2230
MP 25		POLYOLEFIN #12 .153ID EXPAND,BLACK	113852	113852		6014	2248
MP 26		GROMMET, RUBBER	100073	2149	2	2807	2249
MP 27		BUTTON,RANGE SWITCH	426759	426759	11	3155	2250

2590A FINAL ASSEMBLY

717595
2590A-5001

REFERENCE DESIGNATOR A->NUMERICS--->	S	----------DESCRIPTION----------	FLUKE STOCK --NO--	MANUFACTURERS PART NUMBER --OR GENERIC TYPE--	TOT QTY	CLASS	GRPITEM
MP 28		MEDIUM PEWTER SWITCH BUTTON	734921	734921	26	3155	2251
MP 29		BRACKET	166322	1552	1	2803	2254
MP 30		POUCH, VINYL	722439	722439	1	1402	4403
MP 31		CARRYING CASE, BLACK	722405	722405	1	1402	4404
MP 32		KEY, CARRYING CASE	722371	722371		2406	4405
MP 33		NAMEPLATE, SERIAL -REAR PANEL-	472795	472795	1	2506	4407
P		AMPLITUDE ADJUST,CABLE ASSY	651414	651414	2	6002	1103
P		POWER CABLE ASSY	655456	655456	2	6002	2215
Q	*	TRANSISTOR,SI,BV=120V,140W,TO-3	523639	2N5039	1	4811	2219
Q	*	TRANSISTOR,SI,VMOS,PWR,TO-237,VN0606M	741041	741041		4838	3160
R		RES,VAR,CERM,100K,+-10%,1W	631457	631457	2	4713	1114
R		RES,VAR,WW,200,+-5%,2W,BSH,MTG	682914	3540S-1-201	2	4702	1116
R		RES,VAR,WW,1K,+-5%,2W,BSH,MTG	682922	3540S-1-102	4	4702	1115
R		RES,VAR,WW,10K,+-5%,2W,BSH,MTG	682930	3540S-1-103	6	4702	1112
R		RES,VAR,WW,100K,+-5%,2W,BSH,MTG	682948	3540S-1-104	2	4702	1113
R		RES,VAR,CERM,250K,+-20%,2W	733782	733782	1	4713	1117
S		ROCKER TYPE LINE POWER SWITCH	615054	615054	1	5106	1124
S		SWITCH,BCD T/C SELECT	634741	634741	1	5105	1104
U	*	IC, 2K X 8 EPROM	454603	TMS2516JL	1	3121	2221
U	*	IC,NMOS,8BIT MICROCOMPTR W/PROM SOCKT	535310	535310	1	3129	2220
W		#22 HOOK-UP PER MIL-W-16878C, RED	115576	115576	4	6012	1146
W		#22 HOOK-UP PER MIL-W-16878C, YELLOW	115584	115584	3	6012	1148
W		#22 HOOK-UP PER MIL-W-16878C, GREEN	115659	115659	1	6012	1149
W		#22 HOOK-UP PER MIL-W-16878C, GREEN	115659	115659		6012	2247
W		#22 HOOK-UP PER MIL-W-16878C, WHITE	115667	115667	7	6012	1153
W		#22 HOOK-UP PER MIL-W-16878C, BLUE	115675	115675	2	6012	1150
W		#22 HOOK-UP PER MIL-W-16878C, BLACK	115774	115774	8	6012	1145
W		#22 HOOK-UP PER MIL-W-16878C, BROWN	115782	115782	6	6012	1144
W		#22 HOOK-UP PER MIL-W-16878C, BROWN	115782	115782		6012	2246
W		#22 HOOK-UP PER MIL-W-16878C, ORANGE	115790	115790	5	6012	1147
W		#22 HOOK-UP PER MIL-W-16878C, PURPLE	115808	115808	3	6012	1151
W		#22 HOOK-UP PER MIL-W-16878C, GRAY	115816	115816	3	6012	1152
W		#22 HOOK-UP PER MIL-W-16878C, GRAY	115816	115816		6012	2245
W		#18 HOOK-UP PER MIL-W-16878, BLACK	135814	135814		6012	1155
W		RF CABLE ASSY	438226	438226	2	6003	1118
W		COPPER WIRE #18AWG TEFLON,1000V, RED	528687	528687		6012	1154
W		BNC/CONHEX CABLE	734905	734905	2	6003	1119
W		THRESHOLD ADJUST, CABLE ASSEMBLY	734913	734913	1	6002	1111
X		SOCKET,TO-3	342816	342816	1	2111	2225

MAIN BOARD ASSEMBLY

718403
A21-50-4001

REFERENCE DESIGNATOR A->NUMERICS---)	S	----------DESCRIPTION----------	FLUKE STOCK --NO--	MANUFACTURERS PART NUMBER --OR GENERIC TYPE--	TOT QTY	CLASS	GRPITE#
		HEATSINK	386235	6032D	2	3215	1202
		HEATSINK, TO-220	524934	6025B-TT	7	3215	1201
		PCB, MAIN BOARD	718411	718411	1	1705	1001
	*	MAIN PCB ASSY AUTO INSERTED	718429	718429	1	3158	1001
C 1		CAP,MICA,47PF,+-5%,500V	148536	CM15E470J	1	1504	1096
C 2		CAP,POLYPR,0.47UF,+-5%,50V	364042	JF788	1	1511	1087
C 3, 4, 6-		CAP,AL,15UF,+-20%,35V	614024	614024	6	1502	1089
C 9			614024			1502	1089
C 5		CAP,CER,0.0012UF,+-10%,500V,Z5R	106732	CF122	1	1501	1093
C 11, 23, 36,		CAP,AL,1UF,+-20%,50V	602342	SRA SERIES,VB TYPE	16	1502	1092
C 122,123,124,			602342			1502	1092
C 136,137,141,			602342			1502	1092
C 251,257,264,			602342			1502	1092
C 309,310,312,			602342			1502	1092
C 313			602342			1502	1092
C 12, 13, 16,		CAP,MICA,430PF,+-5%,500V	177980	CD15FD431J0	4	1504	1095
C 17			177980			1504	1095
C 14, 15,229		CAP,TA,10UF,+-20%,20V	330662	196D106X0020KA1	3	1508	1088
C 18,120,135,		CAP,CER,5000PF,+-20%,100V,Z5V	175232	C023B101H253M	5	1501	1085
C 252,258			175232			1501	1085
C 20,211,216,		CAP,CER,0.01UF,+80-20%,100V,Z5V	149153	C0238101F103M	4	1501	1113
C 234			149153			1501	1113
C 24- 29,111,		CAP,AL,10UF,+-20%,35V	603985	RLR	28	1502	1090
C 112,119,121,			603985			1502	1090
C 128,129,138,			603985			1502	1090
C 139,145,146,			603985			1502	1090
C 219,253-256,			603985			1502	1090
C 259-262,265,			603985			1502	1090
C 266,311			603985			1502	1090
C 30,206		CAP,POLYES,0.047,+-10%,250V	162008	C280MAE/A47K	2	1507	1097
C 31, 32, 34		CAP,TA,1UF,+-10%,35V	161919	196D010X0035C	3	1508	1133
C 35,402		CAP,CER,0.22UF,+-20%,50V,Z5U	309849	CW3C0C224K	2	1501	1098
C 37,101		CAP,POLYCA,2.2UF,+-10%,100V	306522	C280MCH/A2M2	2	1512	1094
C 38,103-107,		CAP,CER,0.22UF,+-20%,50V,Z5U	519157	RPE111Z5U224M50V	13	1501	1101
C 304,305,306,			519157			1501	1101
C 408,409			519157			1501	1101
C 40		CAP,POLYES,0.47UF,+-10%,100V	369124	369124	1	1507	1100
C 41		CAP,MICA,33PF,+-5%,500V	160317	DM15E330J	1	1504	1099
C 101		CAP,MICA,12PF,+-5%,500V	175224	DM14E120J	1	1504	1122

MAIN BOARD ASSEMBLY

718403
A21-50-4001

REFERENCE DESIGNATOR A->NUMERICS--->	S	----------DESCRIPTION----------	FLUKE STOCK --NO--	MANUFACTURERS PART NUMBER --OR GENERIC TYPE--	TOT QTY	CLASS	GRPITEM
C 102,130,131,		CAP,AL,47UF,+-20%,35V	603977	RLR	8	1502	1091
C 147,148,230,			603977			1502	1091
C 231,232			603977			1502	1091
C 108		CAP,MICA,8PF,+-10%,500V	216986	DM15C080K	1	1504	1123
C 109,302		CAP,VAR,6-50PF,250V,CER	404301	GKD50000	2	1509	1102
C 113,301		CAP,MICA,10PF,+-10%,500V	175216	175216	2	1504	1121
C 114,115		CAP,CER,0.05UF,+80-20%,1000V,Z5U	355420	41C169A3	2	1501	1132
C 116,133		CAP,CER,1000PF,+-10%,500V,X5S	357806	C016B102G102K	2	1501	1104
C 118,140		CAP,POLYES,0.0047UF,+-10%,50V	260844	75F1R5A347	2	1507	1126
C 125,142		CAP,CER,33PF,+-2%,50V,COG	354852	8121-A100-COG-330G	2	1501	1106
C 126,127,143,		CAP,AL,100UF,+50-20%,100V	641225	641225	4	1502	1107
C 144			641225			1502	1107
C 132,151		CAP,CER,470PF,+-10%,1000V,Z5F	368613	368613	3	1501	1124
C 152,154		CAP,CER,470PF,+-20%,100V,X7R	358275	8111-A100-W5R-471M	2	1501	1131
C 201,204		CAP,VAR,0.25-1.5PF,1700V,TEFLON	435016	530-006	2	1509	1109
C 202		CAP,MICA,270PF,+-5%,500V	148452	DM15F271J	1	1504	1127
C 203,207		CAP,MICA,150PF,+-5%,500V	148478	DM15F151J	2	1504	1108
C 205		CAP,MICA,3300PF,+-2%,500V	192518	CD19FD332G0	1	1504	1128
C 208,233		CAP,TA,10UF,+-20%,15V	193623	196D106X0015A1	2	1508	1110
C 209		CAP,POLYES,0.022UF,+-10%,1000V	448183	0.22/10/1000-7	1	1507	1111
C 210		CAP,AL,22UF,+50-20%,35V	436840	436840	1	1502	1112
C 218		CAP,TA,2.2UF,+-20%,20V	161927	196D225X0020HA1	1	1508	1114
C 236		CAP,MICA,100PF,+-5%,500V	148494	DM15F101J	1	1504	1129
C 249,269,405,		CAP,CER,0.01UF,+-20%,100V,X7R	407361	8121-A100-W5R-103M	11	1501	1117
C 410,411,413-			407361			1501	1117
C 418			407361			1501	1117
C 263		CAP,CER,0.05UF,+80-20%,25V,Y5U	148924	5855-000-Y5U0-503Z	3	1501	1103
C 267		CAP,AL,22UF,+-20%,50V	614362	614362	1	1502	1115
C 314		CAP,CER,470PF,+-10%,1000V,Z5F	368613	368613	1	1501	1084
C 401		CAP,AL,190UF,+100-10%,100V	512657	512657	1	1502	1116
C 403		CAP,MICA,1000PF,+-5%,500V	148387	DM19F102J	1	1504	1125
C 404		CAP,POLYES,0.22UF,+-10%,100V	436113	C280MAH1A220K	1	1507	1120
C 406		CAP,AL,470UF,+100-10%,25V	494575	494575	1	1502	1118
C 407		CAP,POLYES,0.1UF,+-10%,100V	393439	719A1	1	1507	1119
C 412		CAP,CER,100PF,+-2%,100V,COG	512848	RPE121	1	1501	1134
CR 15, 16, 17,	*	DIODE,SI,BV= 75.0V,ID=150MA,500 MW	203323	1N4448	7	4805	1081
CR 18, 20,251,	*		203323			4805	1081
CR 256	*		203323			4805	1081
CR 25- 30,104-	*	DIODE,SI, 50 PIV, 1.0 AMP	379412	1N4933	31	4802	1137

MAIN BOARD ASSEMBLY

718403
A21-50-4001

REFERENCE DESIGNATOR A->NUMERICS--->	S	----------DESCRIPTION----------	FLUKE STOCK --NO--	MANUFACTURERS PART NUMBER --OR GENERIC TYPE--	TOT QTY	CLASS	GRPITEM
CR 107,116-119,	*		379412			4802	1137
CR 128-131,209-	*		379412			4802	1137
CR 211,252-255,	*		379412			4802	1137
CR 257-260,262,	*		379412			4802	1137
CR 263	*		379412			4802	1137
CR 101,102	*	DIODE,SI,BV= 50.0V,IO= 50MA,250 MW	381806	1N3062	2	4805	1141
CR 108-111,120-	*	DIODE,SI, 1K PIV, 1.0 AMP	453399	1N4007	8	4802	1083
CR 123	*		453399			4802	1083
CR 112-115,124-	*	DIODE,SI, 100 PIV, 2.5 AMP	495739	3FF10	10	4802	1143
CR 127,264,265	*		495739			4802	1143
CR 201	*	DIODE,SI, 50 PIV, 2.0 AMP	347559	1N5400	1	4802	1144
CR 202,203	*	DIODE,SI,BV= 20.0V,IO= 50MA,SELCTD IR	348177	FD7223	2	4805	1145
CR 301,401	*	DIODE,SI, 100 PIV, 5.0 AMP	483701	5FF10	2	4802	1146
H 1		NYLON PUSH-RIVET W/PRE-DRIVEN PIN BLK	745869	745869	9	2812	1215
H 2		WASHER,FLAT S STEEL,#4,0.032 THK	146225	146225	9	2817	1217
H 3		BROACHING TYPE,.138-32 THD. #KF2-632	393785	393785	7	2808	1220
J		CONN,PWB EDGE,REC,0.100 CTR,20 POS	520189	PWBH4DD10-32	7	2122	1211
J 7		CONN,PWB EDGE,REC,0.100 CTR,44 POS	520148	1-5308843-5	1	2122	1212
JR 301		HEADER, PROGRAMMED	495507	16-675-191	1	3157	1203
L 101,102		SHIELDED, 560MH, 5%	461533	461533	2	1801	1188
L 252		RF, AXL LEAD, MOLDED, WEE, 100UH	174755	174755	1	1801	1190
L 401		CHOKE	490888	490888	1	1800	1009
MP 1		SUPPORT, HYBRID	515635	515635	2	3155	1014
MP 2		SPACER,RND,CERAMIC,0.125IDX0.500	155473	155473	4	2814	1218
MS 3, 4		RES,SET,MF,TC,MATCHED	479030	479030	1	4710	1058
#P 10, 11, 22,		CONN,PWB,HEADER,SIP,0.100,4 POS	631184	631184	5	2107	1207
#P 23, 29			631184			2107	1207
#P 13, 17, 19,		CONN,PWB,HEADER,SIP,0.100,9 POS	631168	631168	4	2107	1209
#P 20			631168			2107	1209
#P 21		CONN,PWB,HEADER,SIP,0.100,6 POS	631176	631176	1	2107	1208
P 24		HEADER,SIP,.156,FRICT. LOK,3,.444	380022	380022	1	2129	1214
Q 5, 23,201,	*	TRANSISTOR,SI,NPN,SMALL SIGNAL	218396	2N3904	6	4819	1155
Q 202,251,255	*		218396			4819	1155
Q 6, 8, 11,	*	TRANSISTOR,SI,N-JFET,TO-92	376475	U2810J	5	4826	1156
Q 13, 15	*		376475			4826	1156
Q 7	*	TRANSISTOR,SI,N-JFET,DUAL,TO-71	419283	419283	1	4828	1157
Q 9, 16, 17,	*	TRANSISTOR,SI,N-JFET,TO-92	343830	NSSF30024	5	4826	1158
Q 24, 25	*		343830			4826	1158
Q 10	*	TRANSISTOR,SI,N-JFET,REMOTE CUTOFF	429977	429977	1	4826	1154

MAIN BOARD ASSEMBLY

718403
A21-50-4001

REFERENCE DESIGNATOR A->NUMERICS--->	S	----------DESCRIPTION----------	FLUKE STOCK --NO--	MANUFACTURERS PART NUMBER --OR GENERIC TYPE--	TOT QTY	CLASS	GRPITEM
Q 14	*	DUAL FET,SELECTED OFFSET	476911	476911	1	4828	1011
Q 101	*	TRANSISTOR,SI,N-JFET,UHF/VHF USE	403634	J310	1	4826	1159
Q 102,105,106,	*	TRANSISTOR,SI,BV=100V, 40W,TO-220	685446	685446	4	4811	1161
Q 108	*		685446			4811	1161
Q 103,104,107,	*	TRANSISTOR,SI,BV=100V, 2W,TO-220	685453	685453	4	4810	1162
Q 109	*		685453			4810	1162
Q 205	*	TRANSISTOR,SI,PNP,SMALL SIGNAL	195974	2N3906	1	4818	1163
Q 252,254,257,	*	TRANSISTOR,SI,BV= 60V, 65W,TO-220	386128	T1P120	4	4811	1153
Q 258	*		386128			4811	1153
Q 255	*	TRANSISTOR,SI,BV=300V, 10W,TO-202	381731	381731	1	4811	1164
Q 401	*	TRANSISTOR,SI,BV= 55V, 40W,TO-220	325753	D45C5	1	4810	1165
Q 403,405,406,	*	TRANSISTOR,SI,VMOS,PWR,TO-237,VN10KM	640516	VN10KM	9	4838	1160
Q 409,410,413,	*		640516			4838	1160
Q 414,417,418	*		640516			4838	1160
Q 408,411,412,	*	TRANSISTOR,SI,BV= 50V, 10W,TO-202	477331	MDS01A	6	4811	1166
Q 415,416,419	*		477331			4811	1166
R 2		RES,CC,47K,+-10%,2W	110015	HB4731	1	4704	1018
R 5		RES,VAR,CERM,200,+-10%,0.5W	275743	275743	1	4713	1062
R 6, 25, 71,		RES,CF,1K,+-5%,0.25W	573170	CR251-4-5P1K	7	4703	1006
R 108,218,240,			573170			4703	1006
R 306			573170			4703	1006
R 8		RES,CF,3.3K,+-5%,0.25W	573287	CR251-4-5P3K3	1	4703	1008
R 9		RES,CF,43K,+-5%,0.25W	573519	573519	1	4703	1009
R 10		RES,CF,27K,+-5%,0.25W	573477	CR251-4-5P27K	1	4703	1010
R 11, 12, 26,		RES,MF,10.02K,+-0.1%,0.125W,50PPM	352245	352245	4	4705	1056
R 27			352245			4705	1056
R 13,141,143,		RES,MF,1K ,+-1%,0.125W,+-100PPM	719468	719468	5	4705	1050
R 171,173			719468			4705	1050
R 14		RES,VAR,CERMET,500K,+-10%,0.5W	474387	360T-504A	1	4713	1063
R 15		RES,MF,49.9 ,+-1%,0.125W,+-100PPM	720318	720318	1	4705	1051
R 16		RES,MF,169K ,+-1%,0.125W,+-100PPM	719732	719732	1	4705	1052
R 21		RES,MF,215K ,+-1%,0.125W,+-100PPM	719864	719864	1	4705	1053
R 22		RES,CF,12K,+-5%,0.25W	573402	CR251-4-5P12K	1	4703	1011
R 23		RES,MF,22.1K,+-1%,0.125W,+-100PPM	719898	719898	1	4705	1054
R 24		RES,MF,221 ,+-1%,0.125W,+-100PPM	719872	719872	1	4705	1055
R 28		RES,CF,150K,+-5%,0.25W	573600	573600	1	4703	1033
R 30		RES,VAR,CERM,500,+-10%,0.5W	720995	720995	1	4713	1071
R 31		RES,VAR,CERM,25K,+-10%,0.5W	721001	721001	1	4713	1061
R 32		RES,MF,10,+-1%,0.125W,100PPM	268789	CMF5510R0F	1	4705	1049

MAIN BOARD ASSEMBLY

718403
A21-50-4001

REFERENCE DESIGNATOR A->NUMERICS--->	S	----------DESCRIPTION----------	FLUKE STOCK --NO--	MANUFACTURERS PART NUMBER --OR GENERIC TYPE--	TOT QTY	CLASS	GRPITEM
R 33, 75,102,		RES,CC,10M,+-5%,0.25W	572842	CB1065	4	4704	1043
R 259			572842			4704	1043
R 39, 40, 41		RES,SET,WW,TOL,TC,MATCHED	375782	375782	1	4710	1059
R 43		RES,CC,16K,+-5%,0.25W	221606	CB1635	1	4704	1019
R 44, 46, 47,		RES,CF,10K,+-5%,0.25W	573394	CR251-4-5P10K	10	4703	1007
R 60,107,304,			573394			4703	1007
R 305,309,310,			573394			4703	1007
R 411			573394			4703	1007
R 45,231,303,		RES,CF,100K,+-5%,0.25W	573584	CR251-4-5P100K	2	4703	1012
R 304,309,310			573584			4703	1012
R 48		RES,MF,150K,+-1%,0.125W,100PPM	241083	CMF551503F	1	4705	1058
R 49		RES,MF,681K ,+-1%,0.125W,+-100PPM	720482	720482	1	4705	1059
R 50		RES,CF,47K,+-5%,0.25W	573527	CR251-4-5P47K	1	4703	1013
R 51		RES,MF,38.3K,+-1%,0.125W,100PPM	241372	CMF553832F	1	4705	1036
R 52		RES,MF,133K ,+-1%,0.125W,+-100PPM	719609	719609	1	4705	1060
R 55,401,402		RES,CF,5.1K,+-5%,0.25W	573329	CR251-4-5P5K1	3	4703	1014
R 56		RES,MF,10.2K,+-1%,0.125W,100PPM	293605	CMF551022F	1	4705	1037
R 58		RES,CF,51K,+-5%,0.25W	573535	573535	1	4703	1015
R 59, 66		A26A RES,CF,39K,+-5%,0.25W	573501	573501	2	4703	1016
R 65		RES,MF,309K,+-1%,0.125W,100PPM	235283	CMF553093F	1	4705	1064
R 67,288		RES,MF,100K,+-1%,0.125W,25PPM	293472	CMF551003F	2	4705	1043
R 68		RES,MF,64.9K,+-1%,0.125W,100PPM	288530	CMF556493F	1	4705	1062
R 69		RES,MF,226K,+-0.1%,0.125W,100PPM	706119	706119	1	4705	1063
R 77		RES,MF,61.9K,+-1%,0.125W,100PPM	237230	CMF556192F	1	4705	1057
R 78,410		RES,MF,6.81K,+-1%,0.125W,100PPM	268417	CMF556813F	2	4705	1038
R 81		RES,WW,6.2K,+-1%,0.125W	461921	461921	1	4707	1051
R 82		RES,CC,2M,+-5%,0.25W	572792	CB2055	1	4704	1044
R 83		RES,WW,100,+-1%,0.125W	461939	461939	1	4707	1052
R 101		RES,CC,100K,+-10%,1W	109397	GB1041	1	4704	1020
R 103,122,123,		RES,CF,220,+-5%,0.25W	574244	CR251-4-5P220E	5	4703	1018
R 186,188			574244			4703	1018
R 104,140,157,		RES,CF,680,+-5%,0.25W	573154	CR251-4-5P680E	5	4703	1019
R 169,185			573154			4703	1019
R 105,415,416,		RES,CF,270,+-5%,0.25W	573071	573071	7	4703	1037
R 420,421,425,			573071			4703	1037
R 426			573071			4703	1037
R 106		RES,CF,5.6K,+-5%,0.25W	573337	CR251-4-5P5K6	1	4703	1038
R 109,187		RES,MF,261,+-1%,0.125W,100PPM	328013	CMF552610F	2	4705	1045
R 110,191		RES,VAR,CERM,100K,+-30%,0.5W	193045	193045	2	4713	1065

MAIN BOARD ASSEMBLY

718403
A21-50-4001

REFERENCE DESIGNATOR A->NUMERICS--->	S	----------DESCRIPTION----------	FLUKE STOCK --NO--	MANUFACTURERS PART NUMBER --OR GENERIC TYPE--	TOT QTY	CLASS	GRPITEM
R 111,115,184,		RES,CF,20K,+-5%,0.25W	573444	CR251-4-2P20K	4	4703	1036
R 190			573444			4703	1036
R 113,193		RES,CF,6.8K,+-5%,0.25W	573352	573352	2	4703	1029
R 116,119,194,		RES,MF,237,+-1%,0.125W,100PPM	328005	CMF552370F	4	4705	1034
R 197			328005			4705	1034
R 117,118,195,		RES,MF,2.61K,+-1%,0.125W,100PPM	289983	CMF552611F	4	4705	1035
R 196			289983			4705	1035
R 124,154		RES,CC,3.9K,+-10%,0.5W	161406	161406	2	4704	1031
R 125,128,155,		RES,CF,1M,+-5%,0.25W	573691	CR251-4-5P1M	6	4703	1021
R 158,205,223			573691			4703	1021
R 126,127,150,		RES,CF,10,+-5%,0.25W	572941	CR251-4-5P10E	4	4703	1030
R 189			572941			4703	1030
R 129,130,159,		RES,MF,10K ,+-1%,0.125W,+-100PPM	719476	719476	8	4705	1065
R 160,243,246,			719476			4705	1065
R 256,272			719476			4705	1065
R 131,132,161,		RES,MF,4.75K,+-1%,0.125W,+-100PPM	720276	720276	4	4705	1066
R 162			720276		-	4705	1066
R 133,163		RES,CF,15K,+-5%,0.25W	573428	CR251-4-5P15K	2	4703	1020
R 134,164,301		RES,CF,470K,+-5%,0.25W	573675	573675	3	4703	1027
R 135,165		RES,MF,19.1K,+-1%,0.125W,100PPM	234963	CMF551912F	2	4705	1067
R 136,137,166,		RES,MF,5.11K,+-1%,0.125W,+-100PPM	720342	720342	4	4705	1068
R 167			720342			4705	1068
R 138,149,168,		RES,MF,43.2K,+-1%,0.125W,100PPM	272153	272153	4	4705	1069
R 179			272153			4705	1069
R 139,170		RES,MF,4.99K,+-1%,0.125W,100PPM	714923	714923	2	4705	1070
R 142,172		RES,MF,9.31K,+-1%,0.125W,100PPM	379040	CMF55	2	4705	1046
R 144,145,174,		RES,VAR,CERM,200K,+-10%,0.5W	381921	3299W-CR2-204	4	4713	1067
R 175			381921			4713	1067
R 146,176,434		RES,VAR,CERM,1K,+-10%,0.5W	393728	3299W-CR2-102	3	4713	1066
R 148,178		RES,VAR,CERM,1K.+-30%,0.5W	193060	ET50W-102	2	4713	1064
R 204		RES,VAR,CERM,200,+-10%,0.5W	474973	3352	1	4713	1068
R 207		RES,MF,900,+-0.1%,0.125W,50PPM	461988	461988	1	4705	1071
R 208		RES,MF,90,+-0.1%,0.125W,50PPM	461970	461970	1	4705	1072
R 209		RES,WW,9.000,+-0.15%,3W	461962	461962	1	4707	1055
R 211		RES,CC,22M,+-10%,0.5W	108233	EB2251	1	4704	1021
R 212,302		RES,CC,22M,+-5%,0.25W	572859	CB2265	2	4704	1023
R 213		RES,CF,1,+-5%,0.25W	572883	572883	1	4703	1024
R 214		RES,CC,100K,+-5%,2W	285056	HB1045	1	4704	1022
R 215		RES,CF,15,+-5%,0.25W	641043	641043	1	4703	1025

MAIN BOARD ASSEMBLY

718403
A21-50-4001

REFERENCE DESIGNATOR A->NUMERICS--->	S	----------DESCRIPTION----------	FLUKE STOCK --NO--	MANUFACTURERS PART NUMBER --OR GENERIC TYPE--	TOT QTY	CLASS	GRPITEM
R 219		RES,VAR,CERM,5K,+-10%,0.5W	478883	478883	1	4713	1069
R 220		RES,CF,2.2M,+-5%,0.25W	342659	CR251-4-5P2M2	1	4703	1028
R 221		RES,VAR,CERM,1M,+-10%,0.5W	485052	485052	1	4713	1070
R 230		RES,CF,4.7K,+-5%,0.25W	573311	CR251-4-5P4K7	1	4703	1028
R 235		RES,CC,5.6K,+-5%,0.5W	187880	187880	1	4704	1029
R 244,247		RES,WW,25,+-5%,10W	733469	733469	2	4706	1054
R 245,248,254,		RESISTOR,MF,39.2K,0.1%,0.125W,25PPM	706176	706176	4	4705	1076
R 270			706176			4705	1076
R 249,266		RES,CF,200,+-5%,0.25W	573055	CR251-4-5P200E	2	4703	1034
R 252,268		RES,MF,97.6K,+-1%,0.125W,100PPM	241380	CMF55	2	4705	1039
R 255,271		RES,MF,30.1K,+-1%,0.125W,100PPM	168286	MFF1-83012F	2	4705	1048
R 257,273		RES,MF,9.09K,+-1%,0.125W,100PPM	221663	CMF559091F	2	4705	1047
R 260,276		RES,MF,33.2K,+-1%,0.125W,100PPM	291393	CMF553322F	2	4705	1033
R 262,278		RES,CC,1.5,+-5%,0.5W	246793	EB	2	4704	1024
R 263,279		RES,CC,10K,+-5%,0.5W	109165	EB1035	2	4704	1026
R 284,285		RES,MF,51.1K,+-1%,0.125W,25PPM	309757	309757	2	4705	1040
R 286		RES,MF,511K,+-1%,0.125W,100PPM	288522	288522	1	4705	1041
R 287		RES,MF,18.2K,+-1%,0.125W,50PPM	347070	347070	1	4705	1042
R 307		RES,CF,6.2K,+-5%,0.25W	573345	573345	1	4703	1035
R 403		RES,MF,20K ,+-1%,0.125W,+-100PPM	719823	719823	1	4705	1075
R 404		RES,MF,1.21K,+-1%,0.125W,+-100PPM	719559	719559	1	4705	1074
R 405		RES,CC,910,+-5%,0.5W	170704	170704	1	4704	1025
R 406		RES,CF,100,+-5%,0.25W	573014	CR251-4-5P100E	1	4703	1022
R 407		RES,CC,68,+-5%,0.25W	572594	CB6805	1	4704	1045
R 408		RES,CF,27,+-5%,0.25W	641357	641357	1	4703	1032
R 409		RES,MF,27.4K,+-1%,0.125W,100PPM	241471	CMF552742F	1	4705	1044
R 412		RES,CC,10K,+-10%,1W	109389	GB	1	4704	1030
R 413,414,418,		RES,CF,33K,+-5%,0.25W	573485	573485	8	4703	1031
R 419,423,424,			573485			4703	1031
R 432,433			573485			4703	1031
R 417,422,427		RES,CC,270,+-5%,0.5W	159616	EB2715	3	4704	1028
R 430		RES,CC,560,+-5%,0.5W	109124	109124	1	4704	1027
R 431		RES,WW,0.04,+-10%,2W	659060	659060	1	4707	1053
RT 201		THERMISTOR,RECT.,POS.,1K,+-40%,25C	446849	180010200	1	4708	1075
RV 201,202,203		VARISTOR,430V,+-10%,1.0MA	447672	V430MA7B	3	4709	1073
S 401-404		SWITCH,PUSHBUTTON,SPST	733808	733808	4	5104	1200
T 1		INVERTER TRANSFORMER	618470	618470	1	5606	1005
T 2		INVERTER TRANSFORMER	618488	618488	1	5606	1006
T 3		TRANSFORMER	735092	735092	1	5606	1007

MAIN BOARD ASSEMBLY

718403
A21-50-4001

REFERENCE DESIGNATOR A->NUMERICS--->		S	----------DESCRIPTION----------	FLUKE STOCK --NO--	MANUFACTURERS PART NUMBER --OR GENERIC TYPE--	TOT QTY	CLASS	GRPITEM
T	4		HF POWER TRANSFORMER	735100	735100	1	5606	1008
‡TP			CONN,TAB,FASTON,PRESS-IN,0.110 WIDE	512889	62395	27	2108	1213
U	1	*	IC,COMPARATOR,8 PIN DIP	352195	SN72311P	1	3142	1090
U	2,111,114	*	IC,OP AMP,JFET INPUT,TO-5 CASE	429837	LF356F	3	3140	1171
U	3	*	IC,CMOS,HEX OPEN DRAIN BUFFER	473389	MM74C906N	1	3130	1097
U	3, 6		CONN,PWB EDGE,REC,0.100 CTR,72 POS	631309	631309	2	2122	1210
U	6	*	IC,OP AMP,JFET INPUT,8 PIN DIP	472779	LF386N	1	3140	1091
U	8,251,253	*	IC,OP AMP,SOURCE CNTRLD,DUAL,LO-NOISE	478032	MC4558NCP1	3	3140	1092
U	11	*	IC,VOLT REG,FIXED,-15 VOLTS,1.5 AMPS	413179	MC7915CP	1	3144	1173
U	12	*	IC,VOLT REG,FIXED,+15 VOLTS,1.5 AMPS	413187	MC7815CT	1	3144	1174
U	13,107,306	*	IC,VOLT REG,FIXED,+5 VOLTS,1.5 AMPS	428847	MC7805CT	3	3144	1175
U	14	*	IC,COMPARATOR,QUAD,14 PIN DIP	387233	LM339N	3	3142	1094
U	20	*	IC,OP AMP,GENERAL PURPOSE,8 PIN DIP	413740	LM307N	1	3140	1172
U	21	*	IC,OP AMP,SELECTED,GEN PURPOSE,TO-78	225961	AD3092	1	3140	1176
U	101	*	IC,CMOS,OSCILLATOR CONTROLLER	643098	ICM7207AIPD	1	3127	1098
U	102	*	IC,CMOS,DIV BY 10CNTR W/10DECODED OUT	403568	CD4017AE	1	3123	1099
U	103	*	IC,LSTTL,HEX INVERTER	393058	SN74LS04N	1	3130	1100
U	104	*	IC,CMOS,HEX INVERTER	404681	CD4069BE	1	3130	110
U	105	*	IC,CMOS,QUAD 2 INPUT NAND GATE	355198	MC14011CP	1	3130	1102
U	108,112	*	IC,BPLR,PWR TRANISTOR DRIVER/AMPLIFER	643072	643072	2	3149	1178
U	109,113	*	IC,BPLR,WAVE FORM GENERATOR/VCO	643080	643080	2	3149	1177
U	110,115	*	IC,OP AMP, UNCOMP GEN PURPOSE,TO-99	381889	LM201AH	2	3140	1179
U	116,118	*	IC,VOLT REG,ADJ,1.2 TO 37 V,1.5 AMPS	460410	LM317T	2	3143	1170
U	117,119		IC,VOLT REG,ADJ,NEG,-1.2VT0-37V.	707661	LM337MP	2	3143	1169
U	201	*	HYBRID RMS CONVERTER	480897	480897	1	3141	1012
U	202,252,254,	*	IC, 2.5 V,40 PPM T.C.,BANDGAP REF	472845	MC1403V	4	3141	1168
U	255	*		472845			3141	1168
U	203	*	IC,OP AMP,JFET IN,COMPENSTD,8 PIN DIP	418780	LF351	1	3140	1096
U	207	*	DIODE,SI,RECT,BRIDGE,BV= 50V,IO=1.0A	418582	VM08	1	4804	1184
U	256	*	IC,OP AMP,SELECTED GBW 600KHZ	418566	LM358N	1	3140	1093
U	301	*	IC,CMOS,14STAGE RIPPLE CARRY BIN CNTR	507640	507640	1	3123	1106
U	302	*	IC,LSTTL,QUAD 2 INPUT NOR GATE	393041	SN74LS02N	1	3130	1089
U	303	*	IC,LSTTL,QUAD 2 IN NAND W/SCHMT TRIG	504449	SN74LS132N	1	3130	1104
U	304	*	IC,CMOS,DUAL 4BIT SER-IN,PAR-OUT SHFT	340125	MC14015CP	1	3124	1103
U	305	*	IC,LSTTL,DUAL J-K F/F,+EDG TRIG	412999	SN74LS109N	1	3133	1107
U	401	*	IC,REGULATING PULSE WIDTH MODULATOR	454678	SG3524N	1	3144	1108
U	402	*	IC,CMOS,QUAD 2 INPUT NOR GATE	355172	CD4001AE	1	3130	1105
U	403	*	IC,CMOS,DUAL D F/F,+EDG TRIG	340117	CD4013AE	1	3133	11
U	404	*	IC,CMOS,HEX BUFFER	381830	CD4050AE	1	3130	1111

MAIN BOARD ASSEMBLY

719403
A21-50-4001

REFERENCE DESIGNATOR A->NUMERICS--->	S	----------DESCRIPTION----------	FLUKE STOCK --NO--	MANUFACTURERS PART NUMBER --OR GENERIC TYPE--	TOT QTY	CLASS	GRPITEM
VR 1	*	ZENER REFERENCE SET	377283	377283	2	4710	1010
VR 18, 19	*		377283			4710	1010
VR 75	*		377283			4710	1010
VR 75, 76	*		377283			4710	1010
VR 4	*	ZENER,UNCOMP, 22.0V, 5%, 5.6MA, 0.4W	181073	1N969B	1	4809	1148
VR 13, 14	*	DIODE,SI,N-JFET,CURRENT REG,IF=1.0 MA	348482	348482	2	4824	1139
VR 19	*	ZENER,COMP, 6.4V, 2%, 2 PPM TC, 0.5MA	393579	1N4567	1	4808	1140
VR 110,111,122,	*	ZENER,COMP, 6.4V, 3%, 1 PPM TC, 2.0MA	357848	SZG20118	4	4808	1142
VR 123	*		357848			4808	1142
VR 202	*	ZENER,UNCOMP, 4.3V, 5%, 20.0MA, 0.4W	180455	IN749A	1	4809	1147
VR 301	*	ZENER,UNCOMP, 5.6V, 5%, 20.0MA, 0.4W	277236	1N752A	1	4809	1138
VR 402-409	*	ZENER,UNCOMP, 36.0V, 5%, 3.4MA, 0.4W	186163	1N974B	8	4809	1084
VR 410	*	ZENER,UNCOMP,36V TRANSIENT SUPPRESSOR	650358	650358	1	4809	1149
X		SOCKET,DIP,0.100 CTR,16 PIN	291534	291534	2	2111	1205
X		SOCKET,DIP,0.100 CTR,14 PIN	370304	DILB14P-108	2	2111	1204
X		SOCKET,DIP,0.100 CTR,40 PIN	429282	DILB40P-108	1	2111	1206
Y 1	*	CRYSTAL,4MHZ,+-0.02%,HC-18/U	474072	474072	1	2351	1195
Y 101	*	CRYSTAL,5.24288MHZ,+-0.01%,HC-18/U	643056	643056	1	2351	1196
Y 301	*	CRYSTAL,38.4KHZ,+-0.01%,DIP	519173	519173	1	2351	1197
Z 5		RES,NET,SIP,8 PIN,7 RES,47K,+-2%	413286	413286	1	4721	1078
Z 204		RES,NET,CERM,CUSTOM	474999	474999	1	4717	1081
Z 205	*	RES,NET,WW,TOL,MATCHED	461491	461491	1	4716	1080
Z 206	*	RES,NET,CERM,TOL,TC,MATCHED	461483	461483	1	4716	1079

T/C INPUT ASSY

648634
A21-44-4002

REFERENCE DESIGNATOR A->NUMERICS--->		S	DESCRIPTION	FLUKE STOCK --NO--	MANUFACTURERS PART NUMBER --OR GENERIC TYPE--	TOT QTY	CLASS	GRPITEM
			PCB T/C INPUT	648576	648576	1	1705	1001
C			CAP,MICA,150PF,+-5%,500V	148478	DM15F151J	1	1504	1010
H	1		P-NUT, 4-40	380196	KF2-440	2	2808	1014
H	2		SCREW,MACHINE,PHP SEMS,STEEL,4-40X3/8	281196	281196	2	2813	1018
H	3		SCREW,MACHINE,PHP,STEEL,6-32X3/8	152165	152165	2	2813	1019
#J			CONN,PWB,PIN,CRIMP,0.058 DIA	233411	60599-3	-2	2107	1020
MP	1		T/C NEGATIVE INPUT	648527	648527	1	3156	1002
MP	2		T/C POSITIVE INPUT	648519	648519	1	3156	1003
MP	3		INSULATOR,THERMOCOUPLE INPUT	473561	473561	1	3155	1005
MP	4		INSULATOR, TO-18	722074	722074	1	3100	1006
MP	5		SPACER,SWAGED,RND,BRASS,4-40X0.070	343996	343996	4	2814	1021
Q		*	TRANSISTOR,SI,NPN,SMALL SIGNAL	329698	329698	1	4819	1012
R			RES,MF,200.08K,+-0.1%,0.125W,50PPM	290122	CMF55200081B	1	4705	1007
R			RES,VAR,CERM,50K,+-10%,0.5W	330688	190PC503B	1	4713	1008

DISPLAY ASSY 648642 A21-44-4003

REFERENCE DESIGNATOR A->NUMERICS--->		S	----------DESCRIPTION----------	FLUKE STOCK --NO--	MANUFACTURERS PART NUMBER --OR GENERIC TYPE--	TOT QTY	CLASS	GRPITEM
			PCB DISPLAY	648584	648584	1	1705	1
***			CONN,ELAST,LCD,0.100X0.200,0.050 THK	453092	22989	4	2125	51
C			CAP,CER,500PF,+-10%,1000V,X5R	105692	2DDH60N501K	1	1501	28
C			CAP,MICA,470PF,+-5%,500V	148429	CD15FD471J0	1	1504	27
C			CAP,MICA,12PF,+-5%,500V	175224	DM14E120J	2	1504	23
C			CAP,POLYES,0.022UF,+-10%,250V	234484	C280MAE/A22K	1	1507	21
C			CAP,CER,0.01UF,+-20%,100V,X7R	407361	8121-A100-W5R-103M	1	1501	22
C			CAP,POLYES,0.22UF,+-10%,100V	436113	C280MAH1A220K	1	1507	26
C			CAP,POLYPR,0.047UF,+-10%,100V	446773	446773	2	1511	24
C			CAP,POLYPR,0.1UF,+-10%,100V	446781	446781	1	1511	25
C			CAP,CER,0.22UF,+-20%,50V,Z5U	519157	RPE111Z5U224M50V	6	1501	20
CR		*	DIODE,SI,BV= 75.0V,IO=150MA,500 MW	203323	1N4448	1	4805	32
DS		*	LCD,5 DIGIT,DIRECT DRIVE	723197	723197	4	4815	2
H	1		MACHINE,THD FORM,PWHP,STEEL,5-20X5/16	494641	494641	8	2813	54
MP	1		BRACKET,LCD	471730	471730	4	3156	3
MP	2		BEZEL, LCD	479642	479642	4	3155	4
Q		*	TRANSISTOR,SI,NPN,SMALL SIGNAL	218396	2N3904	1	4819	35
R			RES,CC,1M,+-10%,1W	109793	GB1051	1	4704	15
R			RES,CF,1K,+-5%,0.25W	343426	CR251-4-5P1K	1	4703	16
R			RES,CF,10K,+-5%,0.25W	348839	CR251-4-5P10K	9	4703	10
R			RES,CF,100K,+-5%,0.25W	348920	CR251-4-5P100K	4	4703	12
R			RES,CF,220K,+-5%,0.25W	348953	CR251-4-5P220K	1	4703	14
R			RES,CF,1M,+-5%,0.25W	348987	CR251-4-5P1M	1	4703	13
R			RES,CF,200K,+-5%,0.25W	441485	CR251-4-5P200K	2	4703	11
U		*	IC,CMOS,DUAL D F/F,+EDG TRIG	340117	CD4013AE	2	3133	41
U		*	IC,CMOS,QUAD 2 INPUT NOR GATE	355172	CD4001AE	1	3130	44
U		*	IC,CMOS,QUAD XOR GATE	355222	CD4030AE	2	3130	39
U		*	IC,CMOS,HEX INVERTER	404681	CD4069BE	1	3130	38
U		*	IC,CMOS,3.5 DIGIT ADC,CUSTOM	429100	429100	1	3127	45
U		*	IC,CMOS,BCD-7SEGMENT LCD DRIVER	507376	CD4056BE	1	3125	43
U		*	IC,TTL,SYNC PRSET DECADE COUNTER	536441	SN74LS160N	1	3123	42
U		*	IC,CMOS,4.5 DIGIT CNTR/DCDR/LCD DRIVR	643106	ICM7224IPL	2	3127	40
U		*	IC,CMOS,32 BIT STAT SHFT REG/LCD DRVR	643114	MD4332BE	1	3127	37
X			SOCKET,DIP,0.100 CTR,40 PIN	429282	DILB40P-108	4	2111	50
Y		*	CRYSTAL,3.84MHZ,+-0.05%,HC-33/U	447615	447615	1	2351	47

SWITCH DECK 1, ASSY

718619
A21-50-4004

REFERENCE DESIGNATOR A->NUMERICS--->	S	----------DESCRIPTION----------	FLUKE STOCK --NO--	MANUFACTURERS PART NUMBER --OR GENERIC TYPE--	TOT QTY	CLASS	GRPITEM
		PCB SWITCH DECK 1	718585	718585	1	1705	1001
C		CAP,CER,0.22UF,+-20%,50V,Z5U	519157	RPE111Z5U224M50V	2	1501	1009
#J		CONN,COAX,REC,PWB	352450	51-051-0000	4	2106	1010
#J		CONN,PWB,HEADER,SIP,0.100,4 POS	631184	631184	3	2107	1011
MP	1	SPACER,RND,PLASTIC,0.039IDX0.094	285353	J64284	8	2814	1014
R		RES,CC,3.9M,+-5%,0.25W	188417	188417	2	4704	1006
R		RES,MF,1K,+-0.1%,0.125W,50PPM	474445	CMF551001B	1	4705	1008
S		SWITCH ASSEMBLY,PUSHBUTTON	473322	473322	1	5110	1004
S		DPDT "PUSH-PUSH"	520437	520437	4	5104	1007
S		FREQUENCY SIGNAL SELECT SWITCH	729467	729467	1	5110	1002
S		RELAY TIMER SWITCH	729483	729483	1	5110	1003

SWITCH DECK 2, ASSY

718627
A21-50-4005

REFERENCE DESIGNATOR A->NUMERICS--->	S	----------DESCRIPTION----------	FLUKE STOCK --NO--	MANUFACTURERS PART NUMBER --OR GENERIC TYPE--	TOT QTY	CLASS	GRPITEM
		PCB SWITCH DECK 2	718593	718593	1	1705	1001
S		MULTIMETER INPUT SELECT SWITCH	729475	729475	1	5110	1002

SW. DECK 3 ASSY

648675
A21-44-4006

REFERENCE DESIGNATOR A->NUMERICS-->	S	DESCRIPTION	FLUKE STOCK --NO--	MANUFACTURERS PART NUMBER --OR GENERIC TYPE--	TOT QTY	CLASS	GRPITEM
		FOR USE W/TO-66 TRANSISTOR	631317	631317	1	3215	1010
		PCB SW. DECK 3	648618	648618	1	1705	1001
H 1		NUT,METAL 4-40 HEX STEEL	110635	110635	2	2808	1011
H 2		WASHER,LOCK,INTRNL,STEEL,#4	110403	110403	2	2817	1012
H 3		BROACHING TYPE, .375,4-40THRD,3/16HD	603894	603894	2	2806	1014
Q	*	TRANSISTOR,SI,BV=500V, 35W,TO-66	385302	385302	1	4811	1008
R		RES,MF,10,+-1%,0.5W,100PPM	151043	CMF65A100F	1	4705	1006
R		RES,MF,1K,+-1%,0.5W,100PPM	151324	CMF651-2-1P1K	1	4705	1005
S		RANGE SELECT SWITCH	634352	634352	1	5110	1003

T/C SELECT ASSY

734889
A21-50-4008

REFERENCE DESIGNATOR A->NUMERICS--->	S	DESCRIPTION	FLUKE STOCK --NO--	MANUFACTURERS PART NUMBER --OR GENERIC TYPE--	TOT QTY	CLASS	GRPITEM
		PCB, T/C SELECT	734897	734897	1	1705	1001
#J		CONN,TAB,FASTON,PRESS-IN,0.110 WIDE	512889	62395	1	2108	1004
S		T/C SELECT SWITCH	634337	634337	1	5110	1002

MULTIMETER INPUT ASSY

718635
A21-50-4009

REFERENCE DESIGNATOR A->NUMERICS--->	S	----------DESCRIPTION----------	FLUKE STOCK --NO--	MANUFACTURERS PART NUMBER --OR GENERIC TYPE--	TOT QTY	CLASS	GRPITEM
		MULTIMETER INPUT PCB	718601	718601	1	1705	1001
F		FUSE,13/32 X 1-3/8,FAST,3A,600V	475004	BBS-3	1	5101	1007
H	1	SEMI-TUBULAR PLATED STEEL, .1205X5/32	103424	103424	2	2812	1008
MP	1	FUSE HLDR,CLIP,13/32 DIA FUSE	103028	103028	2	2102	1009
R		RES,CC,100K,+-10%,1W	109397	GB1041	1	4704	1005
R		RES,WW,FUSIBLE,1K,+-10%,2W	474080	474080	1	4706	1006

EPROM PROGRAMMED

656850
A21-44-4501T

REFERENCE DESIGNATOR A->NUMERICS--->	S	----------DESCRIPTION----------	FLUKE STOCK --NO--	MANUFACTURERS PART NUMBER --OR GENERIC TYPE--	TOT QTY	CLASS	GRPITEM
U		* IC, 2K X 8 EPROM	454603	TMS2516JL	1	3121	1001

SECTION 6
GENERAL INFORMATION

6.0 This section of the manual contains generalized user information. The List of Abbreviations is given on the next page.

List of Abbreviations and Symbols

A or amp	ampere	hf	high frequency	(+) or pos	positive
ac	alternating current	Hz	hertz	pot	potentiometer
af	audio frequency	IC	integrated circuit	p-p	peak-to-peak
a/d	analog-to-digital	if	intermediate frequency	ppm	parts per million
assy	assembly	in	inch(es)	PROM	programmable read-only memory
AWG	american wire gauge	intl	internal	psi	pound-force per square inch
B	bel	I/O	input/output	RAM	random-access memory
bcd	binary coded decimal	k	kilo (10^3)	rf	radio frequency
°C	Celsius	kHz	kilohertz	rms	root mean square
cap	capacitor.	kΩ	kilohm(s)	ROM	read-only memory
ccw	counterclockwise	kV	kilovolt(s)	s or sec	second (time)
cer	ceramic	lf	low frequency	scope	oscilloscope
cermet	ceramic to metal(seal)	LED	light-emitting diode	SH	shield
ckt	circuit	LSB	least significant bit	SI	silicon
cm	centimeter	LSD	least significant digit	serno	serial number
cmrr	common mode rejection ratio	M	mega (10^6)	sr	shift register
comp	composition	m	milli (10^{-3})	Ta	tantalum
cont	continue	mA	milliampere(s)	tb	terminal board
crt	cathode-ray tube	max	maximum	tc	temperature coefficient or temperature compensating
cw	clockwise	mf	metal film	tcxo	temperature compensated crystal oscillator
d/a	digital-to-analog	MHz	megahertz	tp	test point
dac	digital-to-analog converter	min	minimum	u or μ	micro (10^{-6})
dB	decibel	mm	millimeter	uhf	ultra high frequency
dc	direct current	ms	millisecond	us or μs	microsecond(s) (10^{-6})
dmm	digital multimeter	MSB	most significant bit	uut	unit under test
dvm	digital voltmeter	MSD	most significant digit	V	volt
elect	electrolytic	MTBF	mean time between failures	v	voltage
ext	external	MTTR	mean time to repair	var	variable
F	farad	mV	millivolt(s)	vco	voltage controlled oscillator
°F	Fahrenheit	mv	multivibrator	vhf	very high frequency
FET	Field-effect transistor	MΩ	megohm(s)	vlf	very low frequency
ff	flip-flop	n	nano (10^{-9})	W	watt(s)
freq	frequency	na	not applicable	ww	wire wound
FSN	federal stock number	NC	normally closed	xfmr	transformer
g	gram	(-) or neg	negative	xstr	transistor
G	giga (10^9)	NO	normally open	xtal	crystal
gd	guard	ns	nanosecond	xtlo	crystal oscillator
Ge	germanium	opnl ampl	operational amplifier	Ω	ohm(s)
GHz	gigahertz	p	pico (10^{-12})	μ	micro (10^{-6})
gmv	guaranteed minimum value	para	paragraph		
gnd	ground	pcb	printed circuit board		
H	henry	pF	picofarad		
hd	heavy duty	pn	part number		

SECTION 7
SCHEMATIC DIAGRAMS

TABLE OF CONTENTS

FIGURE	TITLE	PAGE
7-1	Parts List, Main P.C.B. Assembly	7-1
7-2	Parts List, Main P.C.B. Assy., Auto-Inserted	7-5
7-3	Reference Designator, Main P.C.B. Assembly	7-7
7-4	Thermocouple Input Assembly	7-8
7-5	Display P.C.B. Assembly	7-9
7-6	P.C.B. Assembly, Switch Deck-1	7-11
7-7	Multimeter Input Select Assembly	7-12
7-8	Range Select Switch Deck Assembly	7-13
7-9	Thermocouple Select Assembly	7-14
7-10	Electrical Test Set, Final Assembly	7-15
7-11	Schematic, Main (Preregulator)	7-25
7-12	Schematic, Main (Power Supply)	7-26
7-13	Schematic, Main (Thermometer)	7-27
7-14	Schematic, Main (Thermometer Calibrator)	7-28
7-15	Schematic, Main (Audio Frequency)	7-29
7-16	Schematic, Main (Frequency Source 1 & 2)	7-30
7-17	Schematic, Main (Multimeter)	7-31
7-18	Schematic, Main (Voltage & Current Sources)	7-32
7-19	Schematic, (Relay Timer)	7-33
7-20	Schematic, Thermocouple Input	7-34
7-21	Schematic, Display (Multimeter & Relay Timer)	7-35

REVISIONS						
LTR	DESCRIPTION	EFF	APPROVAL / DATE			
			DRN	CHK	PROJ ENGR	MFG ENGR
–	RELEASE TO PRODUCTION		DCB 8/3/84	JJF	JJF	AM 8/6/84

A21-50-1601
SHT 1 OF 1 REV –

MAIN P C B ASSY
718403 REV _

CAUTION
SUBJECT TO DAMAGE BY STATIC ELECTRICITY

© 1984 JOHN FLUKE MFG.CO.,INC.

A21-50-3001 REV E

NOTES: UNLESS OTHERWISE SPECIFIED

1. SEE A21-50-1001 FOR SCHEMATIC.

CAUTION
SUBJECT TO DAMAGE BY STATIC ELECTRICITY

PROPRIETARY NOTICE
This document and the technical data herein disclosed are proprietary to John Fluke Mfg. Co. Inc. and shall not without express written permission of John Fluke Mfg. Co. Inc. be used, released or disclosed in whole or in part or used for manufacture for anyone other than John Fluke Mfg. Co. Inc. The information herein has been developed at private expense and may only be used for operation or engineering evaluation and for maintenance use. Drawings, specifications, and other documents which identify procurement of products from other than John Fluke Mfg. Co. Inc.

BASIC DWG NO SUFFIX	DRAWING NO FIRST USED ON APPLICATION	PART NO

QTY	ITEM	PART NO	DRAWING NO	DESCRIPTION	REF DES

PARTS LIST

FLUKE 89536	JOHN FLUKE MFG. CO. INC P O BOX C9090 EVERETT WA 98206
	DO NOT SCALE DRAWING
UNLESS OTHERWISE SPECIFIED TOLERANCE .XX ± .XXX ± ANGLES ±	DIMENSIONS IN INCHES

DWN D. C. FARRETT	8/3/84	REF. DESIGNATOR, MAIN P.C.B. ASSY
ENGR JJF	8/5/84	
PROJ ENGR T L DOLLIS		
MFG ENGR A M [illegible]	8/6/84	
FINISH		

PART NO	SIZE	DRAWING NO
	D	A21-50-1601
NEXT ASSY	SH 1 OF 1	REV –

PROPRIETARY

NOTES: UNLESS OTHERWISE SPECIFIED

1. FOR SCHEMATIC DIAGRAMS SEE A21-50-1001.
2. ASSEMBLE PER S.O.P. 111.8.
3. MARK ASSEMBLY REVISION LETTER IN SPACE PROVIDED USING INK STAMP (PERMA DRI 177 OR EQUIVALENT).
4. LEAD LENGTH .100 MAX.
5. C303 TO BE SELECTED IN TEST.
6. CLOCK ITEM 11 WITH PAINTED POLARIZING DOT FACING Q15. DISREGARD TAB ON ITEM 11.
7.
8. **WARNING:** ⊗ INDICATES USAGE OF MOS DEVICE(S) WHICH MAY BE DAMAGED BY STATIC DISCHARGE. USE SPECIAL HANDLING PER S.O.P. 19.1
9.
10. PREP OFF P.C.B. .300" MAX, 2 PLACES.
11.
12.
13.
14.
15.
16.
17.
18.
19.
20. VR1, R18 (1/2W) & R19 (1/4W) MATCHED SET. VR75, R75 (1/2W) & R76 (1/4W) MATCHED SET
21. R262, R276
22. R263, R279
23. R417, R422, R427
24. R124, R154
25. R260, R276
26. R116, R119, R194, R197
27. R117, R118, R195, R196
28. R78, R410
29. R252, R268
30. R284, R285
31. R67, R268
32. R109, R187
33. R142, R172
34. R257, R273
35. R255, R271
36. C35, C402
37. R244, R247
38. R3(100K), R4(11.8K) MATCHED SET
39. R5(5.2K), R40(9K), R42(1K) MATCHED SET
40. R148, R178
41. R110, R191
42. R146, R176, R434
43. R144, R145, R174, R175.
44. RV201, RV202, RV203
45. C252, C258, C18, C120, C135
46. C14, C15, C229
47. C3, C4, C6, C7, C8, C9
48. C24-C29, C111, C112, C119, C121, C128, C129, C138, C139, C145, C146, C219, C253-C256, C259-C262, C265, C266, C311
49. C102, C130, C131, C147, C148, C230, C231, C232
50. C11, C23, C36, C122, C123, C124, C136, C137, C141, C251, C257, C264, C309, C310, C312, C313
51. C10, C37
52. C12, C13, C16, C17
53. C30, C206
54. C38, C103-C107, C304, C305, C306, C408, C409, C250, C271
55. C109, C302
56. C116, C133
57. C248, C263, C270
58. C125, C142
59. C126, C127, C143, C144
60. C203, C207
61. C201, C204
62. C208, C233
63. C20, C211, C216, C234
64. C405, C410, C411, C413-C418, C249, C269
65. C113, C301
66. C132, C151, C314.
67. C118, C140
68. C152, C154
69. C114, C115
70. C31, C32, C34
71. CR101, CR102
72. VR110, VR111, VR122, VR123
73. CR112-CR115, CR124-CR127, CR264, CR265
74. CR202, CR203
75. CR301, CR401
76. Q252, Q254, Q257, Q258
77. Q5, Q23, Q201, Q202, Q251, Q255
78. Q6, Q8, Q11, Q13, Q15
79. Q9, Q16, Q17, Q24, Q25
80. Q403, Q409, Q410, Q413, Q414, Q417, Q418, Q405, Q406
81. Q102, Q105, Q106, Q108
82. Q103, Q104, Q107, Q109
83. Q408, Q411, Q412, Q415, Q416, Q419
84. U117, U119
85. U116, U118
86. U2, U111, U114
87. U13, U107, U306
88. U109, U113
89. U108, U112
90. U110, U115
91. L101, L102
92. S401-S404
93. P10, P11, P22, P23, P29
94. P13, P17, P19, P20
95. J1A, J1B, J2, J4, J5, J8, J9
96. TP1-TP13, TP15-TP19, TP101, TP102, TP201, TP202, TP203, TP205, TP207, 301, 302
97. CR25-30, 104-107, 116-119, 128-131, 209, 210, 211, 252-255, 257-260, 262, 263.

CAUTION
SUBJECT TO DAMAGE BY STATIC ELECTRICITY

A21-50-4001 SH 1 OF 4 REVS

REVISIONS

LTR	DESCRIPTION	ECO	APPROVAL	DATE
A	ADDED FLAG NOTE 10. QTY ITEM 85 WAS 2. QTY ITEM 101 WAS 11. QTY ITEM 103 WAS 1. DEL ITEM 105 ADDED ITEM 219.		DCB	4/27/84
B	QTY ITEM 124 WAS 2. QTY ITEM 213 WAS 25. ADDED ITEM 197 P/N ITEM 215 WAS 256156. P/N ITEM 217 WAS 110395. DEL. ITEM 216.	DCO# 19468	DCB	7/19/84
–	RELEASE TO PRODUCTION		DCB	7/26/84

PARTS LIST CONT'D SHEET 2

2	54	733469		RES.,WW,10W,5%,25Ω	37.
1	53	659060		RES.,WW,2W,10%,.04Ω	R431
1	52	461939		RES.,WW,1/8W,1%,100Ω	R83
1	51	461921		RES.,WW,1/8W,1%,6.2K	R81
	50				
1	49	268789		RES.,MF,1/8W,1%,10Ω	R32
2	48	168286		RES.,MF,1/8W,1%,30.1K	35.
2	47	221663		RES.,MF,1/8W,1%,9.09K	34.
2	46	379040		RES.,MF,1/8W,1%,9.31K	33.
2	45	328013		RES.,MF,1/8W,1%,261Ω	32.
1	44	241471		RES.,MF,1/8W,1%,27.4K	R409
2	43	293472		RES.,MF,1/8W,1%,100K	31.
1	42	347070		RES.,MF,1/8W,1%,18.2K	R287
1	41	288522		RES.,MF,1/8W,1%,511K	R286
2	40	309757		RES.,MF,1/8W,1%,51.1K	30.
2	39	241380		RES.,MF,1/8W,1%,97.6K	29.
2	38	268417		RES.,MF,1/8W,1%,6.81K	28.
1	37	293605		RES.,MF,1/8W,1%,10.2K	R56
1	36	241372		RES.,MF,1/8W,1%,38.3K	R51
4	35	289983		RES.,MF,1/8W,1%,2.61K	27.
4	34	328005		RES.,MF,1/8W,1%,237Ω	26.
2	33	291393		RES.,MF,1/8W,1%,33.2K	25.
	32				
2	31	161406		RES.,CC,1/2W,10%,3.9K	24.
1	30	109389		RES.,CC,1W,10%,10K	R412
1	29	187880		RES.,CC,1/2W,5%,5.6K	R235
3	28	159616		RES.,CC,1/2W,5%,270Ω	23.

1	27	109124		RES.,CC,1/2W,5%,560Ω	R43
2	26	109165		RES.,CC,1/2W,5%,10K	22
1	25	170704		RES.,CC,1/2W,5%,910Ω	R40
2	24	246793		RES.,CC,1/2W,5%,1.5Ω	21
	23				
1	22	285056		RES.,CC,2W,5%,100K	R21
1	21	108233		RES.,CC,1/2W,10%,22M	R20
1	20	109397		RES.,CC,1W,10%,100K	R19
1	19	221606		RES.,CC,1/4W,5%,16K	R43
1	18	110015		RES.,CC,2W,10%,47K	R2
	17				
	16				
	15				
2	14	515635	8050A-2007	SUPPORT, HYBRID	
	13				
1	12	480897	53-5026	HYBRID,RMS CONVERTER	U2
1	11	476911	2180A-4501	DUAL FET, SELECTED	Q1
2	10	377283	8600A-4502	ZENER REFERENCE SET	Z
1	9	490888	2030A-6402	CHOKE	L4
1	8	735100	A21-50-6304	TRANSFORMER, INVERTER	T4
1	7	735092	A21-50-6303	TRANSFORMER, INVERTER	T3
1	6	618488	A21-44-6302	TRANSFORMER, INVERTER	T2
1	5	618470	A21-44-6301	TRANSFORMER, INVERTER	T1
	4				
	3				
	2				
1	1	718429	A21-50-4001A1	ASSY,MAIN P.C.B.(A1)	
QTY	ITEM	PART NO	DRAWING NO	DESCRIPTION	

PARTS LIST

2590M	2590M-5001	717595	
BASIC	A21-50-5001	716233	
DWG NO SUFFIX	DRAWING NO	PART NO	
APPLICATION	FIRST USED ON		

PROPRIETARY NOTICES
This document and the information disclosure thereon are proprietary to John Fluke Mfg. Co. Inc. and shall not without express written permission of John Fluke Mfg. Co. Inc. be used, released or disclosed in whole or in part or used to create derivations from a composition similar to and for manufacture by anyone other than John Fluke Mfg. Co. Inc. The information hereon for both disclosure or patent purposes and may only be used for purposes of engineering evaluation and for manufacture and inspection specifications and other documents which specify procurement of products from John Fluke Mfg. Co. Inc.

FLUKE	JOHN FLUKE MFG CO., INC P.O. BOX C9090 EVERETT, WA 98206	DAN D.C. BARRETT	3/24/84
89536	DO NOT SCALE DRAWING	CHK	7/18/84
UNLESS OTHERWISE SPECIFIED		PROJ ENGR T.L. ROPP	8/1/84
TOLERANCE	DIMENSIONS IN INCHES	MFG ENGR A.S. [illegible]	7/27/84
FRACT		FINISH	

ASSEMBLY, MAIN P.C.B.

PART NO	SIZE	DRAWING NO	REV
718403	D	A21-50-40[illegible]	[illegible]
SCALE —		SH 1 OF 4	

PROPRIETARY

REV	DESCRIPTION	EFF	APPROVAL / DATE
	SEE SHEET I FOR REVISIONS		

A21-50-4001 SHT 2 REV B

QTY	ITEM	PART NO	DRAWING NO	DESCRIPTION	REF DES
	223				
	222				
	221				
7	220	393785		U-NUT,#6-32	
	219				
4	218	155473		SPACER,CERAMIC,1/2"	
9	217	146225		WASHER, FLAT, #4	
	216				
9	215	745869		PUSH-RIVIT, PLASTIC	
1	214	380022		CONN.,HEADER,3POS	P24
27	213	512889		CONNECTOR,TEST POINT	96.
1	212	520148		CONN.,EDGE,44 POS	J7
7	211	520189		CONN.,EDGE,20 POS	95.
[illegible]	210	[illegible]		CONN.,EDGE,72 POS	J3,6
4	209	[illegible]		CONN.,POST HEADER,9 POS	94.
1	208	[illegible]		CONN.,POST HEADER,6 POS	P21
[illegible]	207	[illegible]		CONN.,POST HEADER,4 POS	93.
1	206	429282		SOCKET, 40 PIN DIP	
2	205	276535		SOCKET,16 PIN DIP	
2	204	[illegible]		SOCKET,14 PIN DIP	
1	203	[illegible]		HEADER,PROGRAMMED	JR301
[illegible]	202	386235		HEATSINK	
7	201	524934		HEATSINK,TO-220	
4	200	733808		SWITCH,SPST	92.
	199				
	198				
1	197	[illegible]		CRYSTAL,38.4KHZ	Y301
1	196	[illegible]		CRYSTAL,5.24288MHZ	Y101
1	195	[illegible]		CRYSTAL,4MHZ	Y1
	194				
	193				
	192				
	191				
[illegible]	190	[illegible]		CHOKE,100uH	L252

QTY	ITEM	PART NO	DRAWING NO	DESCRIPTION	REF DES
	189				
2	188	363150		INDUCTOR,560nH	91.
	187				
	186				
	185				
1	184	418582		I.C.,DIODE BRIDGE,VM08	U207
	183				
	182				
	181				
	180				
2	179	381889		I.C.,LINEAR,LM201A	90.
2	178	643072		I.C.,LINEAR,ICL 8063MJE	89.
2	177	643080		I.C.,LINEAR,ICL 8038	88.
1	176	225961		I.C.,LINEAR,AD3092	U21
3	175	428847		I.C.,VOLT.REG.,7805	87.
1	174	413187		I.C.,VOLT.REG.,7815	U12
1	173	413179		I.C.,VOLT.REG.,7915	U11
1	172	413740		I.C.,LINEAR,LM307	U20
3	171	429837		I.C.,LINEAR,LF358	86.
2	170	460410		I.C.,VOLT,REG.,ADJ. LM317	85.
2	169	707661		I.C.,VOLT.REG.,ADJ. LM337	84.
	168				
	167				
6	166	477331		TRANSISTOR,NPN,MPSU01A	83.
1	165	325753		TRANSISTOR,PNP,D45C5	Q401
1	164	381731		TRANSISTOR,NPN,MPSU10	Q255
1	163	195974		TRANSISTOR,PNP,2N3906	Q205
4	162	685453		TRANSISTOR,PNP,TIP-30C	82.
4	161	685446		TRANSISTOR,NPN,TIP-31C	81.
9	160	640516		TRANSISTOR,FET,VN10KM	80.
1	159	403634		TRANSISTOR,FET	Q101
5	158	343830		TRANSISTOR,FET	79.
1	157	419283		TRANSISTOR,DUAL FET	Q7
5	156	376475		TRANSISTOR,FET	78.
6	155	218396		TRANSISTOR,NPN,2N3904	77.
1	154	429977		TRANSISTOR,FET	Q10
4	153	386128		TRANSISTOR,NPN,TIP-20	76.
	152				
	151				
	150				
1	149	650358		DIODE,T.V.S.,36V,1N5646	VR410
1	148	181073		DIODE,ZENER,22V,1N969B	VR4
1	147	180455		DIODE,ZENER,4.3V,1N749A	VR202
2	146	483701		DIODE,5FF10	75.
2	145	348177		DIODE,SI,FD7223	74.
1	144	347559		DIODE,SI,1N5400	CR201
10	143	495739		DIODE,3FF10	73.
4	142	357848		DIODE,ZENER,64.V,1N4578	72.
2	141	381806		DIODE,SI,1N3062	71.
1	140	393579		DIODE,ZENER,6.4V,1N4567	VR19
2	139	348482		DIODE,CURRENT REG.	VR13, 14
1	138	277236		DIODE,ZENER,5.6V,1N752A	VR301
31	137	379412		DIODE, SILICON, IN4933	97
	136				

QTY	ITEM	PART NO	DRAWING NO	DESCRIPTION	REF DES
	135				
1	134	512848		CAP.,CERAM,100V,100pF	C412
3	133	161919		CAP.,TANT,35V,1uF	70.
2	132	355420		CAP.,CERAM,1KV,.05uF	69.
2	131	358275		CAP.,CERAM,100V,470pF	68.
	130				
1	129	148494		CAP.,MICA,500V,100pF	C236
1	128	192518		CAP.,MICA,500V,3300pF	C205
1	127	148452		CAP.,MICA,500V,270pF	C202
2	126	739987		CAP.,POLY,50V,.0047uF	67.
1	125	148387		CAP.,MICA,500V,1000pF	C403
3	124	368613		CAP.,CERAM,1KV,470pF	66.
1	123	216986		CAP.,MICA,500V,8pF	C108
1	122	175224		CAP.,MICA,500V,12pF	C101
2	121	175216		CAP.,MICA,500V,10pF	65.
1	120	435113		CAP.,POLY,100V,.22uF	C404
1	119	393439		CAP.,POLY,100V,.1uF	C407
1	118	494575		CAP.,ALUM,25V,470uF	C406
11	117	407361		CAP.,CERAM,100V,.01uF	64.
1	116	512657		CAP.,ALUM,100V,190uF	C401
1	115	614362		CAP.,ALUM,50V,22uF	C267
1	114	161927		CAP.,TANT,20V,2.2uF	C218
4	113	149153		CAP.,CERAM,100V,.01uF	63.
1	112	436840		CAP.,ALUM,35V,22uF	C210
1	111	448183		CAP.,POLY,1KV,.022uF	C209
2	110	193623		CAP.,TANT,15V,10uF	62.
2	109	435016		CAP.,VARI,1.7KV,.25-1.5pF	61.
2	108	148478		CAP.,MICA,500V,150pF	60.
4	107	641225		CAP.,ALUM,100V,100uF	59.
2	106	354852		CAP.,CERAM,50V,33pF	58.
	105				
2	104	357806		CAP.,CERAM,500V,1000pF	56.
3	103	148924		CAP.,CERAM,25V,.05uF	57.
2	102	404301		CAP.,VARI,250V,6-50pF	55.
13	101	519157		CAP.,CERAM,50V,.22uF	54.
1	100	369124		CAP.,POLY,100V,.47uF	C40
1	99	160317		CAP.,MICA,500V,33pF	C41
2	98	309849		CAP.,CERAM,50V,.22uF	36.
2	97	162008		CAP.,POLY,250V,.047uF	53.
	96				
4	95	177980		CAP.,MICA,500V,430pF	52.
2	94	306522		CAP.,POLY,100V,2.2uF	51.
1	93	106732		CAP.,CERAM,500V,.0012uF	C5
16	92	602342		CAP.,ALUM,50V,1uF	50.
8	91	603977		CAP.,ALUM,35V,47uF	49.
28	90	603985		CAP.,ALUM,35V,10uF	48.
6	89	614024		CAP.,ALUM,35V,15uF	47.
3	88	330662		CAP.,TANT,20V,10uF	46.
1	87	364042		CAP.,POLY,50V,.47uF	C2
1	86	148536		CAP.,MICA,500V,47pF	C1
5	85	175232		CAP.,CERAM,100V,.005uF	45.
	84				
	83				
	82				

QTY	ITEM	PART NO	DRAWING NO	DESCRIPTION	REF DES
1	81	474999		RES., NET., CUSTOM	Z204
1	80	461491		RES. NET.,1Ω,.9 Ω	Z205
1	79	461483		RES. NET.,	Z206
1	78	413286		RES.NET.,8 PIN SIP,47K	Z5
	77				
	76				
1	75	446849		THERMISTOR	RT201
	74				
3	73	447672		VARISTOR, 10%, 430V	44.
	72				
1	71	720995		RES.,VARI,20T,500Ω	R30
1	70	485052		RES.,VARI,1T,1M	R221
1	69	478883		RES.,VARI,1T,5K	R219
1	68	474973		RES.,VARI,1T,200Ω	R204
4	67	381921		RES.,VARI,20T,200K	43.
3	66	393728		RES.,VARI,20T,1K	42.
2	65	193045		RES.,VARI,1T,100K	41.
2	64	193060		RES.,VARI,1T,1K	40.
1	63	474387		RES.,VARI,1T,500K	R14
1	62	275743		RES.,VARI,1T,200Ω	R5
1	61	721001		RES.,VARI,20T,25K	R31
	60				
1	59	375782		RES.,SET,MF,MATCHED	39.
1	58	479030		RES.,SET,MF,MATCHED	38.
	57				
	56				
1	55	461962		RES.,WW,3W,.15%,9Ω	R209

PARTS LIST

CAUTION
SUBJECT TO DAMAGE BY STATIC ELECTRICITY

2590A	2590A-5001	711595
BASIC	A21-50-5001	716233
DWG NO SUFFIX	DRAWING NO	PART NO
	FIRST USED ON	
	APPLICATION	

PROPRIETARY NOTICE

FLUKE 89536 — JOHN FLUKE MFG. CO. INC., P.O. BOX C9090, EVERETT WA 98206 — DO NOT SCALE DRAWING — UNLESS OTHERWISE SPECIFIED DIMENSIONS IN INCHES

DWN D.C. BARRETT 3/10/81 — PROJ. ENGR T.L. ROISE 6/4/81 — MFG. ENGR A.K. WESS 7/27/81

ASSEMBLY MAIN P.C.B.

PART NO	SIZE	DRAWING NO
718403	D	A21-50-4001

SCALE — SH 2 OF 4 REV B

PROPRIETARY

MAIN P.C.B. ASS'Y
718403 REV D

SEE DETAIL I

CAUTION
SUBJECT TO DAMAGE
STATIC ELECTRICITY

1984 JOHN FLUKE MFG.CO.,INC.

LTR	DESCRIPTION	ECP

SEE SHEET 1 FOR REVISIONS

A21-50-4001
SH 3 OF 4 REV D

PLASTIC PACKAGE
METAL PACKAGE

CLOCKING DETAIL
DETAIL I
2 PLACES

WHITE / BLUE TWISTED PAIR, 2"LG; 5/16" STRIP-BACK (ITEMS 5 & 8 ONLY)
CHAMFER DENOTES PIN 1
WHITE WIRE, 2"LG 5/16" STRIP-BACK (ITEMS 5 & 8 ONLY)
BLUE WIRE, 2"LG; 5/16" STRIP-BACK.

DETAIL II
BOTTOM VIEW
ITEMS 5,6,7 & 8

TRANSISTOR -153, -161 OR -162
201 OR 202
215
217

DETAIL III
TYPICAL 9 PLACES

54 REF
218 2 PLACES

DETAIL IV
TYPICAL 2 PLACES

SEE DETAIL II
4 PLACES, ITEMS 5,6,7 & 8

4 PLACES
SEE DETAIL III
9 PLACES
SEE DETAIL IV
2 PLACES

SEE SHEET 1 FOR PARTS LIST

QTY	ITEM	PART NO	DRAWING NO	DESCRIPTION	REF

PARTS LIST

CAUTION
SUBJECT TO DAMAGE BY
STATIC ELECTRICITY

ES80X	ES80X-5001	717585
BASIC	A21-50-5001	716233
DWG NO SUFFIX	DRAWING NO	PART NO
FIRST USED ON APPLICATION		

PROPRIETARY NOTICE
This document and the information herein are proprietary to John Fluke Mfg. Co. Inc. and shall not, without express written permission of John Fluke Mfg. Co. Inc. be used, reproduced or disclosed to others in part or whole to serve any purpose harmful to, or competitive thereto, or otherwise detrimental to John Fluke Mfg. Co. Inc. Any information herein has been developed, prepared, acquired, and may only be used for purposes of programming, operation and for maintenance and repair specifications, and other documents which permit procurement of products from John Fluke Mfg. Co. Inc.

FLUKE
89536

JOHN FLUKE MFG CO INC
P O BOX C9090
EVERETT WA 98206

DO NOT SCALE DRAWING

UNLESS OTHERWISE SPECIFIED
TOLERANCE
DIMENSIONS IN INCHES
ANGLES ±1°

DWN	D.C BARRETT	7/25/84
CHK		
PROJ ENGR	T.L ROSA	6/1/84
MFG ENGR	R.L. [illegible]	[illegible]

FINISH

ASSEMBLY, MAIN P.C.B.

PART NO	SIZE	DRAWING NO
718403	D	A21-50-4001

SCALE 1.5:1 SH 3 OF 4 REV D

PROPRIETARY

FORM 44580 Rev 2 81

REVISIONS

LTR	DESCRIPTION	ECO	APPROVAL	DATE

SEE SHEET 1 FOR REVISIONS

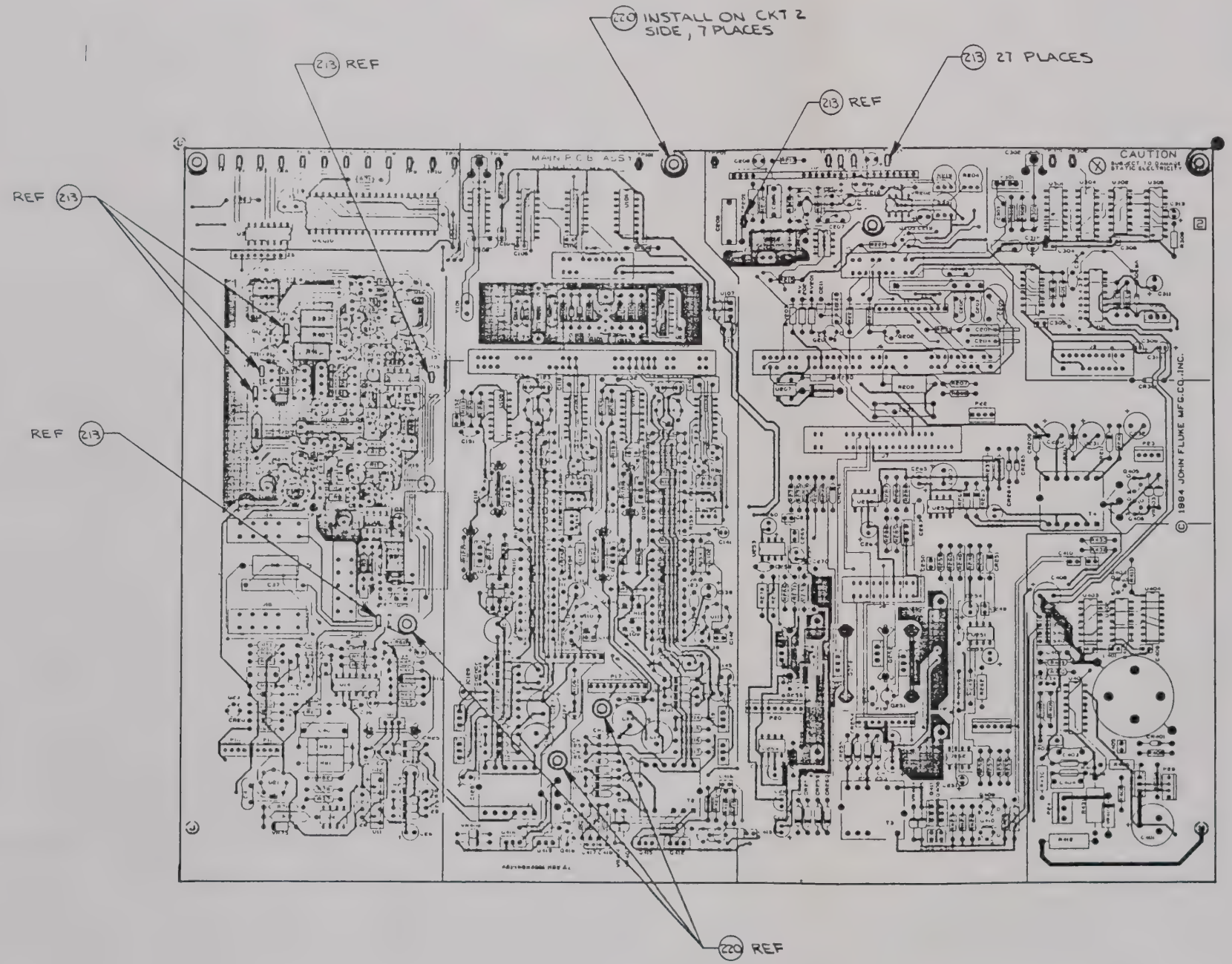

SEE SHEET 1 FOR PARTS LIST

QTY	ITEM	PART NO	DRAWING NO	DESCRIPTION	REF DES

PARTS LIST

CAUTION
SUBJECT TO DAMAGE BY STATIC ELECTRICITY

2350A	A21-50-5001	711595
BASIC	A21-50-5001	762333
DWG NO SUFFIX	DRAWING NO	PART NO
	FIRST USED ON	

APPLICATION

PROPRIETARY NOTICE

This document and the information disclosure thereon are proprietary to John Fluke Mfg. Co. Inc. and shall not be reproduced without permission of the John Fluke Mfg. Co. Inc. or used in whole or part to create or assist in the creation of a product for sale or distribution by anyone other than John Fluke Mfg. Co. Inc. or its licensees. It is received in confidence and its contents may not be disclosed to parties not directly connected with the performance of work authorized by John Fluke Mfg. Co. Inc. or its licensees. It is received in confidence and its contents may not be disclosed to parties not directly connected with the performance of work authorized by John Fluke Mfg. Co. Inc. or its licensees. It is received in confidence and its contents may not be disclosed to parties not directly connected with the performance of work authorized by John Fluke Mfg. Co. Inc. or its licensees.

FLUKE	JOHN FLUKE MFG CO INC P O BOX C9090 EVERETT WA 98206	DWN D C BARRETT 3/23/84
89536	DO NOT SCALE DRAWING	CHK PROJ ENGR T L ROLFE MFG ENGR N E WEISS

UNLESS OTHERWISE SPECIFIED
TOLERANCES ON: DIMENSIONS IN INCHES
FRACT ± DECIMALS ANGLES ±

ASSEMBLY, MAIN P.C.B.

PART NO	SIZE	DRAWING NO
718403	D	A21-50-4001
NEXT ASSY	USED ON 4	UP 4

REV B

PROPRIETARY

NOTES: UNLESS OTHERWISE SPECIFIED

1. ASSEMBLE PER S.O.P. 111.8
2. SEE A21-50-1001 FOR SCHEMATIC
3. LEADS TO BE .100 LONG MAX.
4. REVISIONS TO THIS DRAWING TO BE MADE THROUGH CAD DATA BASE #673.
5. **WARNING:** ⊗ INDICATES USAGE OF MOS DEVICE(S) WHICH MAY BE DAMAGED BY STATIC DISCHARGE. USE SPECIAL HANDLING PER S.O.P. 19.1
6.
7.
8.
9. R113, R193
10.
11. R6,R25,R71,R108,R218,R240,R306.
12. R44,R46,R47,R60,R107,R304,R305,R309,R310,R411
13. R45,R231
14. R55,R401,R402
15. R103,R122,R123,R186,R188
16. R104,R140,R157,R169,R185
17. R133,R163
18. R128,R158,R125,R155,R205,R223
19. R212,R302
20. R134,R164,R222,R301
22. R126,R127,R156,R189
23. R413,R414,R418,R419,R423,R424,R432,R433.
24. R249,R266
25. R111,R115,R184,R190
26. R105,R415,R416,R420,R421,R425,R426
27. R33,R102,R259,R275
28. R13,R141,R143,R171,R173
29. R11,R12,R26,R27
31. R129,R130,R159,R160,R243,R246,R256,R272
32. R131,R132,R161,R162.
33. R135,R165
34. R136,R137,R166,R167
35. R138,R149,R168,R179
36. R139,R170
37. R245,R248,R254,R270
38. CR15,CR16,CR17,CR18,CR20,CR251,CR256
39.
40. CR108-111,CR120-123
41. VR402-409
42. U8,U251,U253
43. U202,U252,U254,U255

1	108	454678		I.C., PWM. 3524	U401
1	107	412999		I.C.,DIGITAL,74LS109	U305
1	106	507640		I.C.,DIGITAL,4060B	U301
1	105	355172		I.C., DIGITAL, 4001B	U402
1	104	504449		I.C.,DIGITAL,74LS132	U303
1	103	340125		I.C.,DIGITAL,4015B	U304
1	102	355198		I.C.,DIGITAL,4011UBE	U105
1	101	404681		I.C.,DIGITAL,4069UBE	U104
1	100	393058		I.C.,DIGITAL,74LS04	U103
1	99	403568		I.C.,DIGITAL,4017B	U102
1	98	643098		I.C.,DIGITALICM7207A	U101
1	97	473389		I.C.,DIGITAL,74C906	U3
1	96	418780		I.C.,LINEAR,LF351N	U203
4	95	472845		I.C.,LINEAR,VOLT-REF,2.5V	43.
1	94	387233		I.C.,LINEAR,LM339N	U14
1	93	418566		I.C.,LINEAR,LM358N	U256
3	92	478032		I.C.,LINEAR,MC4558	42.
1	91	472779		I.C.,LINEAR,LF356N	U6
1	90	352195		I.C.,LINEAR,LM311	U1
1	89	393041		I.C.,DIGITAL,74LS02	U302
1	88	340117		I.C., DIGITAL, 4013A	U403
1	87	381830		I.C., DIGITAL, 4050B	U404
	86				
	85				
8	84	186163		DIODE,ZENER,36V	41.
8	83	453399		DIODE,1N4007	40.
	82				
	81				
	80				
	79				
	78				
	77				
4	76	706176		RES.,MF,1/8W,1%,39.2K	37.
1	75	719823		RES.,MF,1/8W,1%,20K	R403
1	74	719559		RES.,MF,1/8W,1%,1.21K	R404
	73				
1	72	461970		RES.,MF,1/8W,1%,90Ω	R208
1	71	461988		RES.,MF,1/8W,1%,900Ω	R207
2	70	719923		RES.,MF,1/8W,1%,4.99K	36.
4	69	272153		RES.,MF,1/8W,1%,43.2K	35.
4	68	720342		RES.,MF,1/8W,1%,5.11K	34.
2	67	234963		RES.,MF,1/8W,1%,19.1K	33
4	66	720276		RES.,MF,1/8W,1%,4.75K	32
8	65	719476		RES.,MF,1/8W,1%,10K	31
1	64	235283		RES.,MF,1/8W,1%,309K	R65
1	63	706119		RES.,MF,1/8W,1%,226K	R69
1	62	288530		RES.,MF,1/8W,1%,64.9K	R68
	61				
1	60	719609		RES.,MF,1/8W,1%,133K	R52
1	59	720482		RES.,MF,1/8W,1%,681K	R49
1	58	241083		RES.,MF,1/8W,1%,150K	R48
1	57	237230		RES.,MF,1/8W,1%,61.9K	R77
4	56	352245		RES.,MF,1/8W,1%,10.02K	29.
1	55	719872		RES.,MF,1/8W,1%,221Ω	R24
1	54	719898		RES.,MF,1/8W,1%,22.1K	R23
1	53	719864		RES.,MF,1/8W,1%,215K	R21
1	52	719732		RES.,MF,1/8W,1%,169K	R16
1	51	720318		RES.,MF,1/8W,1%,49.9Ω	R15
5	50	719468		RES.,MF,1/8W,1%,1K	28.
	49				
	48				
	47				
	46				
1	45	572594		RES.,CC,1/4W,5%,68Ω	R407
1	44	572792		RES.,CC,1/4W,5%,2M	R82
4	43	572842		RES.,CC,1/4W,5%,10M	27.
	42				
	41				
	40				
	39				
1	38	573337		RES.,CF,1/4W,5%,5.6K	R106
7	37	573071		RES.,CF,1/4W,5%,270Ω	26.
4	36	573444		RES.,CF,1/4W,5%,20K	25.
1	35	573345		RES.,CF,1/4W,5%,6.2K	R307
2	34	573055		RES.,CF,1/4W,5%,200Ω	24.
1	33	573600		RES.,CF,1/4W,5%,150K	R28
1	32	641357		RES.,CF,1/4W,5%,27Ω	R408
8	31	573485		RES.,CF,1/4W,5%,33K	23.
4	30	572941		RES.,CF,1/4W,5%,10Ω	22.
2	29	573352		RES.,CF,1/4W,5%,6.8K	9
1	28	573311		RES.,CF,1/4W,5%,4.7K	R230
4	27	573675		RES.,CF,1/4W,5%,470K	20
1	26	342659		RES.,CF,1/4W,5%,2.2M	R220
1	25	641043		RES.,CF,1/4W,5%,15Ω	R215
1	24	572883		RES.,CF,1/4W,5%,1Ω	R213
2	23	572859		RES.,CF,1/4W,5%,22M	19
1	22	573014		RES.,CF,1/4W,5%,100Ω	R418
6	21	573691		RES.,CF,1/4W,5%,1M	18
2	20	573428		RES.,CF,1/4W,5%,15K	17
5	19	573154		RES.,CF,1/4W,5%,680Ω	16
5	18	574244		RES.,CF,1/4W,5%,220Ω	15
	17				
2	16	573501		RES.,CF,1/4W,5%,30K	R59
1	15	573535		RES.,CF,1/4W,5%,51K	R58
3	14	573329		RES.,CF,1/4W,5%,5.1K	14
1	13	573527		RES.,CF,1/4W,5%,47K	R56
2	12	573584		RES.,CF,1/4W,5%,100K	13
1	11	573402		RES.,CF,1/4W,5%,12K	R72
1	10	573477		RES.,CF,1/4W,5%,27K	R10
1	9	573519		RES.,CF,1/4W,5%,43K	R9
1	8	573287		RES.,CF,1/4W,5%,3.3K	R8
10	7	573394		RES.,CF,1/4W,5%,10K	12
7	6	573170		RES.,CF,1/4W,5%,1K	11
	5				
	4				
	3				
	2				
1	1	718411	A21-50-3001	P.C.B., MAIN ASSEMBLY	

PARTS LIST

QTY	ITEM	PART NO	DRAWING NO	DESCRIPTION	REF DES

LTR	DESCRIPTION	ECO	APPROVED				
A	DELETED ITEMS 17. REV CKTY ITEM 1.		DLB 9/27/84				
B	REV CKTY. QTY ITEM 7 WAS 1. DEL "R308" ITEM 82.	D-08 74408	DLB 12/4/84				
–	RELEASE TO PRODUCTION		DLB 11/8/84				

A21-50-4001AT

CAUTION
SUBJECT TO DAMAGE BY STATIC ELECTRICITY

PROPRIETARY NOTICE

This document and the information data contained herein is proprietary to John Fluke Mfg. Co. Inc. and shall not without express written permission of John Fluke Mfg. Co. Inc. be used, released or disclosed in whole or in part or used in behalf by or for the benefit of any third party, for any purpose other than those for which it is furnished by John Fluke Mfg. Co. Inc. The information herein has been developed at private expense and may only be used for operation, maintenance or repair of equipment purchased from John Fluke Mfg. Co. Inc. or equipment manufactured according to drawings, specifications and data furnished by John Fluke Mfg. Co. Inc.

BASIC DWG NO SUFFIX	A21-50-4001	718403
	DRAWING NO	PART NO
	FIRST USED ON	
	APPLICATION	

FLUKE 89536

JOHN FLUKE MFG CO INC
P O BOX C9090
EVERETT WA 98206

DO NOT SCALE DRAWING

UNLESS OTHERWISE SPECIFIED
TOLERANCE
DIMENSIONS IN INCHES
FRACT
DEC
ANGLES
FINISH

DRAWN	D.C. BARRETT	9/20/84
CHK		9/26/84
PROJ ENGR	T.L. MOUNT	11/13/84
MFG ENGR	A.R. WISE	11/7/84

ASSEMBLY, MAIN P.C.B. (AUTO-INSERTED)

PART NO	SIZE	DRAWING NO
718429	D	A21-50-4001AT

SCALE — SHT 1 OF 2 REV B

PROPRIETARY

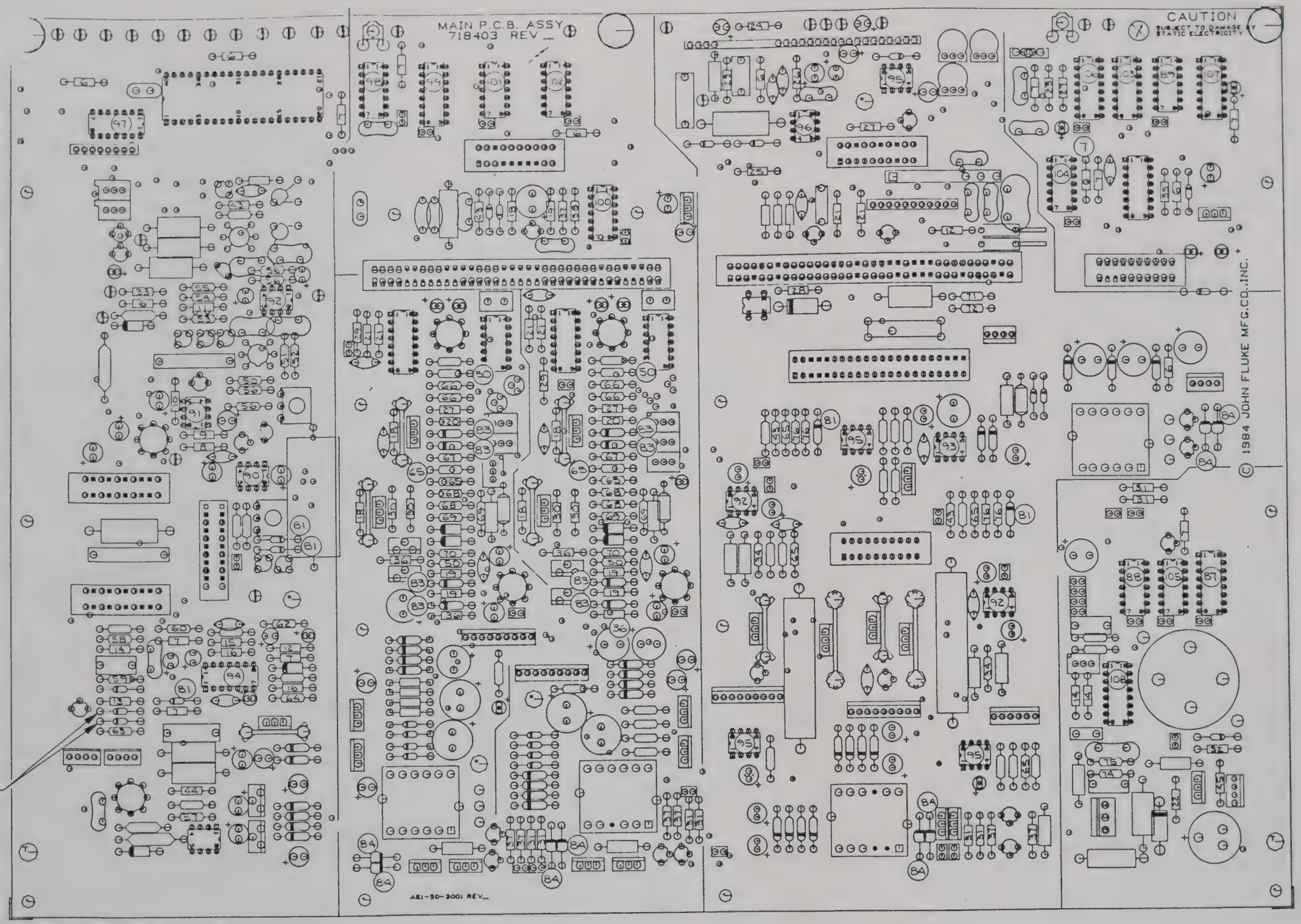

SEE SHEET 1 FOR REVISIONS

SEE SHEET 1 FOR NOTES & PARTS LIST

QTY	ITEM	PART NO	DRAWING NO	DESCRIPTION	REF DES

PARTS LIST

CAUTION
SUBJECT TO DAMAGE BY STATIC ELECTRICITY

BASIC	A21-50-4001	718403
DWG NO	DRAWING NO	PART NO
SUFFIX	FIRST USED ON	
APPLICATION		

PROPRIETARY NOTICE

This document and the technical data furnished in connection with it are proprietary to John Fluke Mfg. Co., Inc. and shall not without express written permission of John Fluke Mfg. Co. Inc. be used, reproduced or disclosed in whole or in part or used to furnish information to others or for manufacture by anyone other than John Fluke Mfg. Co. Inc. The information thereon shall not be published by printing or any other means unless such publication bears an appropriate copyright notice. This restriction does not limit the right to use information obtained from any other source. Acceptance of this document constitutes agreement with the above restrictions.

FLUKE	JOHN FLUKE MFG CO., INC P.O. BOX C9090 EVERETT, WA 98206	DWN D.C. BARRETT 7/23/84
89536	DO NOT SCALE DRAWING	CHK
UNLESS OTHERWISE SPECIFIED		PROJ ENGR T. L. ROBB 8/1/84
TOLERANCE .XX ± .XXX ± ANGLES ±	DIMENSIONS IN INCHES	MFG ENGR M. R. WEISS 8/31/84
		FINISH

ASSEMBLY, MAIN P.C.B
(AUTO-INSERTED)

PART NO	SIZE	DRAWING NO
718429	D	A21-50-4001 A1

SCALE 1.5:1 SHT 2 OF 2 REV B

PROPRIETARY

LTR	DESCRIPTION	EFF	APPROVAL	DATE
—	RELEASE TO SPECIALS			

A21-44-4002 SH 1 OF 1 REV —

NOTES: UNLESS OTHERWISE SPECIFIED

1. FOR SCHEMATIC DIAGRAM SEE A21-44-1002.
2. ASSEMBLE PER S.O.P. 111.8.
3. MARK ASSEMBLY REVISION LETTER IN SPACE PROVIDED USING INK STAMP (PERMA-DRI. 177 OR EQUIVALENT).
4. TRIM LEADS TO .05 MAX.
5. CLEAN ASSEMBLY PER S.O.P. 89.4.
6. VALUE TO BE DETERMINED IN TEST.
7. MOUNT ITEM 12 & 22 FLUSH AGAINST P.C.B., AND REMOVE TAB ON ITEM 12.
8. INSTALL SCREWS, ITEM 19, INTO ITEMS 2 & 3 AND BURR ENDS OF SCREWS BEFORE INSTALLING ITEMS 2 & 3.

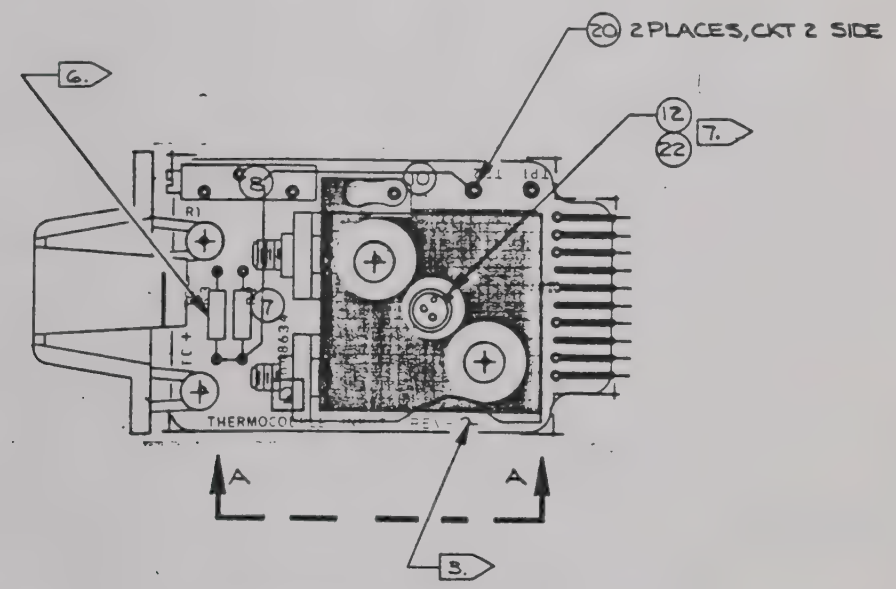

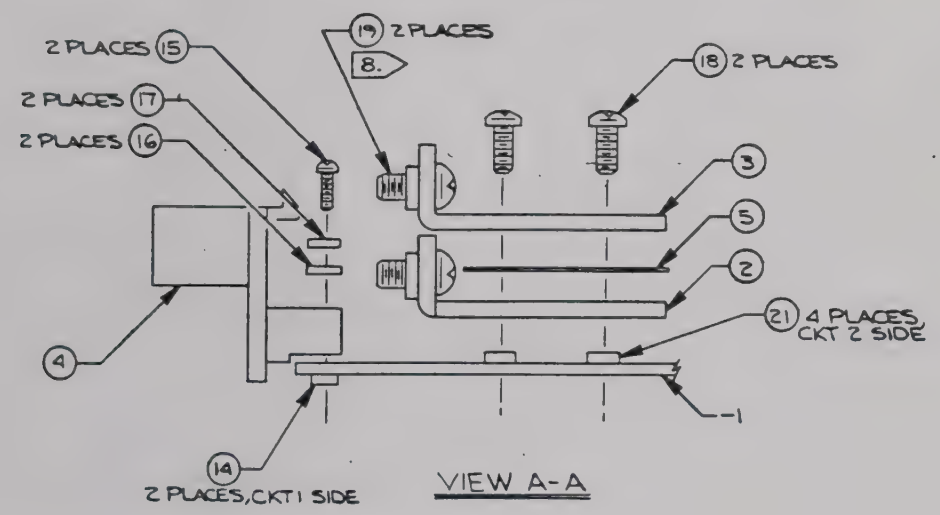

VIEW A-A

QTY	ITEM	PART NO	DRAWING NO	DESCRIPTION	REF DES
1	22	655357		INSULATOR, TO-5	
1	21	343996		SPACER, #4-40X.07	
2	20	233411		CONNECTOR PCB	TP1,2
2	19	152165		SCREW, #6-32 X 3/8 PHP	
2	18	281196		SCREW, SEMS #4-40 X 3/8	
2	17	110385		WASHER, #4 SPLIT	
2	16	110890		WASHER, #4 FIBER	
2	15	403782		SCREW, #4-40 X 7/16 PHP	
2	14	380196		P-NUT, #4-40	
	13				
1	12	329698		TRANSISTOR 2N2484	Q1
	11				
1	10	148478		CAP, MICA, 500V, 150PF	
	9				
1	8	330688		RES. VAR. 50K, 20T	R1
1	7	290122		RES. 1/8W, MF, 200.08K	R2
	6				
1	5	473561	2190A-8003	INSULATOR	
1	4	464123	2190A-2003	INPUT DRAWER	
1	3	648519	A21-44-2008	POSITIVE TC INPUT	TC +
1	2	648527	A21-44-2009	NEGATIVE TC INPUT	TC -
1	1	648576	A21-44-3002	PCB, TC INPUT	A2

PARTS LIST

BASIC	A21-44	587394
DWG NO SUFFIX	DRAWING NO	PART NO
	FIRST USED ON	
APPLICATION		

PROPRIETARY NOTICE

FLUKE — JOHN FLUKE MFG CO INC, P.O. BOX 432, MOUNTLAKE TERRACE, WA 98043

89536 — DO NOT SCALE DRAWING

UNLESS OTHERWISE SPECIFIED — TOLERANCE — DIMENS UNDER INCHES

DWN D.C. BARRETT — CHK D.C. BARRETT — PROJ ENGR — MFG ENGR

THERMOCOUPLE INPUT ASSY

PART NO	SIZE	DRAWING NO
648634	D	A21-44-4002

SCALE 2:1 — SH 1 OF 1 — REV —

REVISIONS			
LTR	DESCRIPTION	ECO	APPROVED
—	RELEASE TO SPECIALS		DCN 4-5-82

A21-44-4003 SHT 1 OF 2 REV —

NOTES:

1. FOR SCHEMATIC DIAGRAMS SEE A21-44-1003.
2. ASSEMBLE PER S.O.P. 111.8.
3. MARK ASSY REV LETTER IN SPACE PROVIDED USING INK STAMP PERMA DRI 177 OR EQUIV.
4. CLEAN ASSY PER S.O.P. 89.4.
5. TRIM LEADS TO .05 MAX. PER S.O.P. 39.19
6. WARNING: ⊗ INDICATES USAGE OF MOS DEVICE(S) WHICH MAY BE DAMAGED BY STATIC DISCHARGE. USE SPECIAL HANDLING PER S.O.P. 16.7.
7. LCD1, LCD2, LCD3, LCD4.
8. R4, R5, R6, R101, R102, R103, R301, R302.
9. R2, R203, R204, R205.
10. C1, C101, C102, C103, C302, C303.
11. C104, C301.
12. C204, C206.
13. U202, U303.
14. U101, U301.
15. U102, U302.
16. INSTALL ITEM 2 WITH LCD CIRCUIT TRACES AGAINST ITEM 51.
17. INSTALL AFTER FLOW SOLDER AND LEAD TRIM.

	QTY	ITEM	PART NO	DRAWING NO	DESCRIPTION	REF DES
17	8	54	494641		SCREW, S.T., #5x5/16	
		53				
		52				
17	4	51	453092		CONN, ELASTROMERIC	
	4	50	429282		SOCKET, IC, 40 PIN	
		49				
		48				
	1	47	447615		CRYSTAL, 3.84MHz	Y201
		46				
17 ⊗	1	45	429100		IC, A/D CONVERTER	U201
⊗	1	44	355172		IC, DIGITAL 4001	U105
⊗	1	43	507376		IC, DIGITAL 4056	U104
⊗	1	42	536441		IC, DIGITAL 74LS160	U103
⊗	2	41	340117		IC, DIGITAL 4013B	15
17 ⊗	2	40	643106		IC, DIGITAL ICM7224	14
⊗	2	39	355222		IC, DIGITAL 4030	13
⊗	1	38	404681		IC, DIGITAL 4069	U2
17 ⊗	1	37	643114		IC, DIGITAL MD4332B	U1
		36				
	1	35	213396		TRANSISTOR, NPN, 2N3904	Q201
		34				
		33				
	1	32	203323		DIODE, SILICONE IN4448	CR101
		31				
		30				
		29				
	1	28	105692		CAP, CER, 500V, 500pF	C208

	QTY	ITEM	PART NO	DRAWING NO	DESCRIPTION	REF DES
	1	27	148429		CAP, MICA, 500V, 470pF	C203
	1	26	436113		CAP, MYLAR, 100V, .33uF	C202
	1	25	446781		CAP, POLY, .10uF	C201
	2	24	446773		CAP, POLY, .047uF	12
	2	23	175224		CAP, MICA, 500V, 12pF	11
	1	22	407361		CAP, CER, 100V, .01uF	C105
	1	21	234484		CAP, MYLAR, 250V, .022uF	C2
	6	20	519157		CAP, CER, 50V, .22uF	10
		19				
		18				
		17				
	1	16	343426		RES., DC, 1/4W, 5%, 1K	R103
	1	15	109793		RES, C.C., 1W, 5%, 1M	R202
	1	14	348953		RES, DC, 1/4W, 5%, 220K	R201
	1	13	348987		RES, DC, 1/4W, 5%, 1M	R104
	4	12	348920		RES, DC, 1/4W, 5%, 100K	9
	2	11	441485		RES, DC, 1/4W, 5%, 200K	R1,R3
	8	10	348339		RES, DC, 1/4W, 5%, 10K	8
		9				
		8				
		7				
		6				
		5				
17	4	4	479642	8010A-2009	BEZEL, LCD	
17	4	3	471730	3010A-2008	BRACKET, LCD	
17	4	2	686071	A21-44-3012	LCD, 5 DIGIT	7
	1	1	643584	A21-44-3003	PCB DISPLAY ASSY	

PARTS LIST

CAUTION
SUBJECT TO DAMAGE BY STATIC ELECTRICITY

BASIC DWG NO SUFFIX	DRAWING NO	PART NO
	A21-44	587354
APPLICATION	FIRST USED ON	

PROPRIETARY NOTICE
This document and the information or data contained or disclosed are proprietary to John Fluke Mfg. Co. Inc. and shall not without express written permission of John Fluke Mfg. Co. Inc. be used, reproduced or disclosed in whole or in part or used to obtain information from a competitive source or used for manufacture by anyone other than John Fluke Mfg. Co. Inc. The information herein has been developed at private expense and may only be used for purposes of engineering evaluation and for the operation and maintenance of equipment and other communications with John Fluke Mfg. Co. Inc.

FLUKE	JOHN FLUKE MFG. CO. INC. P.O. BOX 43210 MOUNTLAKE TERRACE, WA 98043	DWN B.G.WAGONBLAST 4/5/82
89536	DO NOT SCALE DRAWING	CHK D.C.BARRETT 4/7/82
	UNLESS OTHERWISE SPECIFIED	PROJ ENGR
	TOLERANCE .XX = ± .XXX = ± ANGLES = ±	DIMENSIONS IN INCHES .X = ±	MFG ENGR
		FINISH

DISPLAY PCB ASSY

PART NO	SIZE	DRAWING NO
648642	D	A21-44-4003
SCALE 2:1	SH 1 OF 2	REV —

REVISIONS

LTR	DESCRIPTION	ECO	APPROVED	DATE

SEE SHEET1FOR REV.

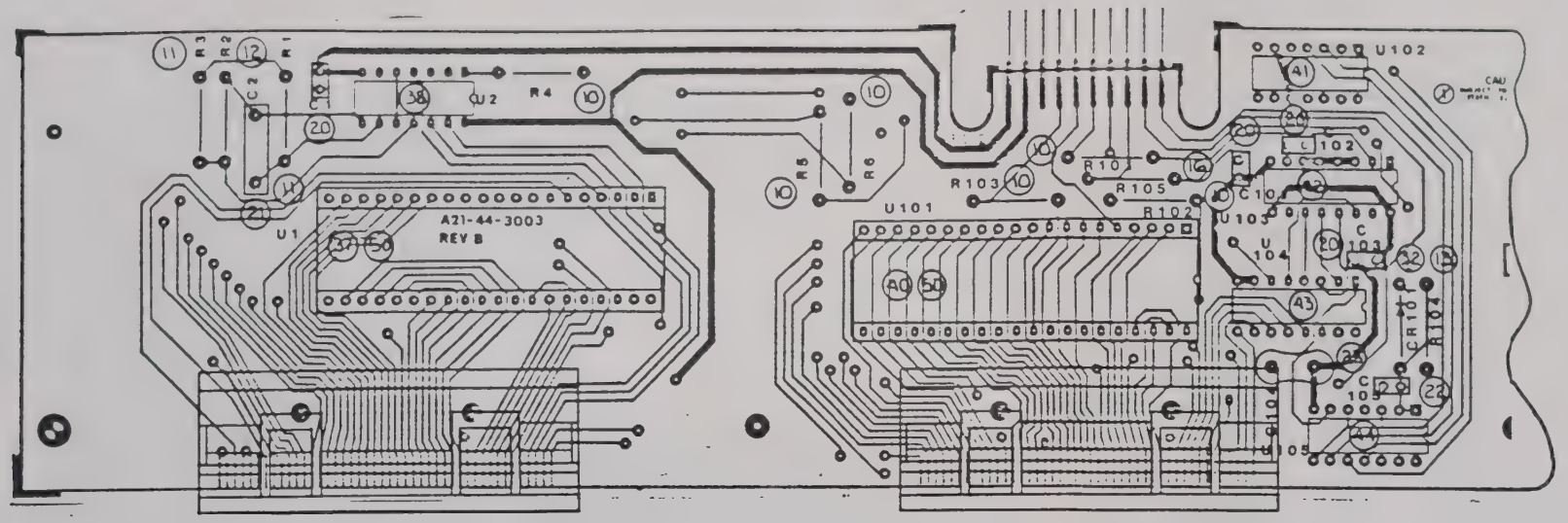

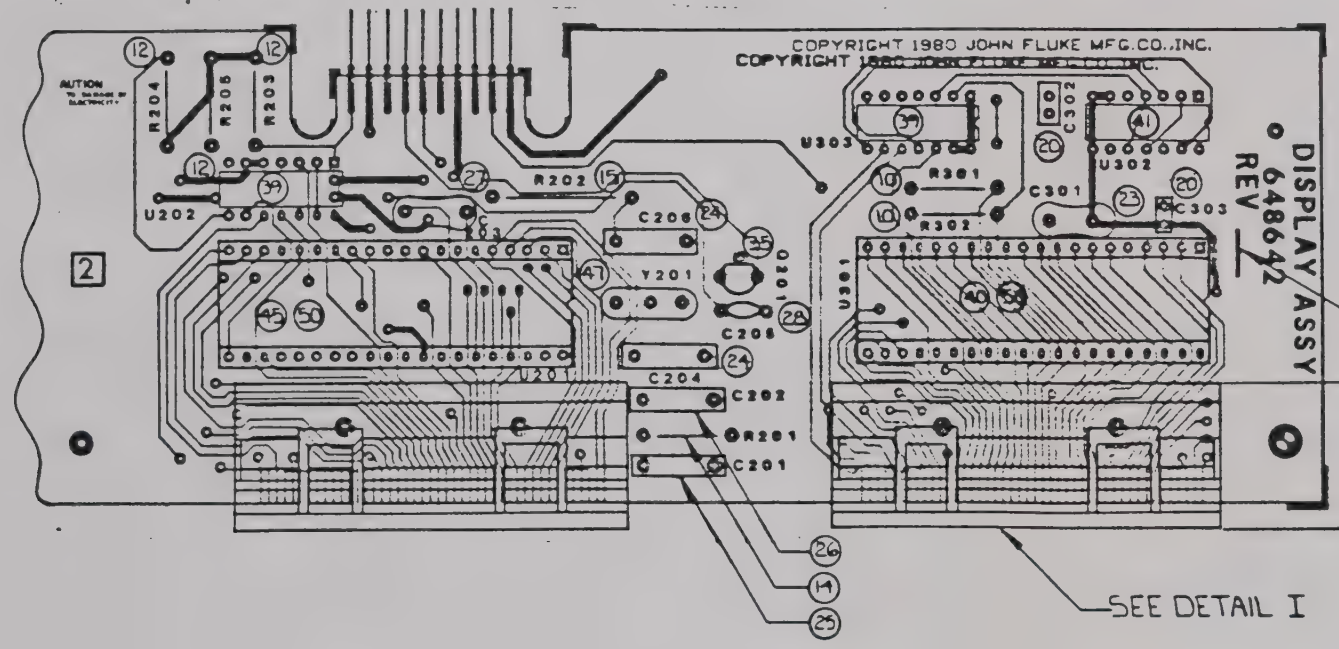

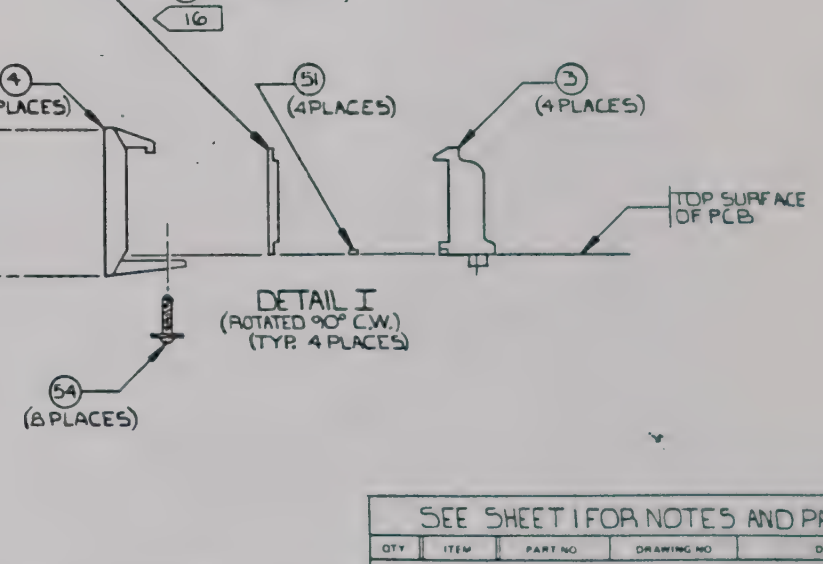

SEE SHEET 1 FOR NOTES AND PARTS LIST

QTY	ITEM	PART NO	DRAWING NO	DESCRIPTION	REF DES

PARTS LIST

CAUTION
SUBJECT TO DAMAGE BY
STATIC ELECTRICITY

BASIC DWG NO SUFFIX	DRAWING NO	PART NO
	A21-44	587394
APPLICATION	FIRST USED ON	

PROPRIETARY NOTICE

This document and the technical data herein disclosed are proprietary to John Fluke Mfg. Co., Inc. and shall not without express written permission of John Fluke Mfg. Co. Inc. be used, reproduced or disclosed to others for sale or for any purpose except as specifically authorized in writing. Upon a competitive sale or loss of use for any reason of any or all of the items covered by this document, whether sold by John Fluke Mfg. Co. Inc. or others, this document and all reproductions thereof in possession and those users be used for purposes of engineering evaluation and for disassembly and inspection, and the user agrees to return this document upon demand by John Fluke Mfg. Co. Inc.

	JOHN FLUKE MFG. CO., INC. P.O. BOX 43210 MOUNTLAKE TERRACE, WA 98043	DWN R.C. WAGONFELLAST 4-3-82
89536	DO NOT SCALE DRAWING	CHK D.C. BARNETT 4/7/82
	UNLESS OTHERWISE SPECIFIED:	PROJ ENGR
	TOLERANCE .X = ± .XX = ± .XXX = ± ANGLES = ±	DIMENSIONS IN INCHES MFG ENGR FINISH

DISPLAY PCB ASSY

PART NO	SIZE	DRAWING NO
648642	D	A21-44-4003
SCALE 2:1	SH 2 OF 2	REV —

LTR	DESCRIPTION	ECO	APPROVALS / DATE
-	RELEASE TO PRODUCTION		

A21-50-4004

NOTES: UNLESS OTHERWISE SPECIFIED

1. FOR SCHEMATIC DIAGRAM SEE A21-50-1001.
2. MARK ASSEMBLY REVISION LETTER IN SPACE PROVIDED USING INK STAMP (PERMA-DRI 177 OR EQUIVALENT).
3. ASSEMBLE PER S.O.P. 111.8.
4. CLEAN ASSEMBLY PER S.O.P. 89.4.
5. LEADS TO BE .100" LG MAX.
6. TRIM LEADS FLUSH TO P.C.B. WHERE INDICATED.
7. REMOVE ASSEMBLIES FROM CARRIER AFTER FLOW SOLDER. CUT TABS FLUSH TO OR BELOW P.C.B. EDGE.
8. R112, R192
9. S1, S2, S3, S10.
10. C110, C153
11. P12, P14, P15, P18.
12. P27, P28, P30.
13. BEVEL EDGE FINGERS, .02" MAX.

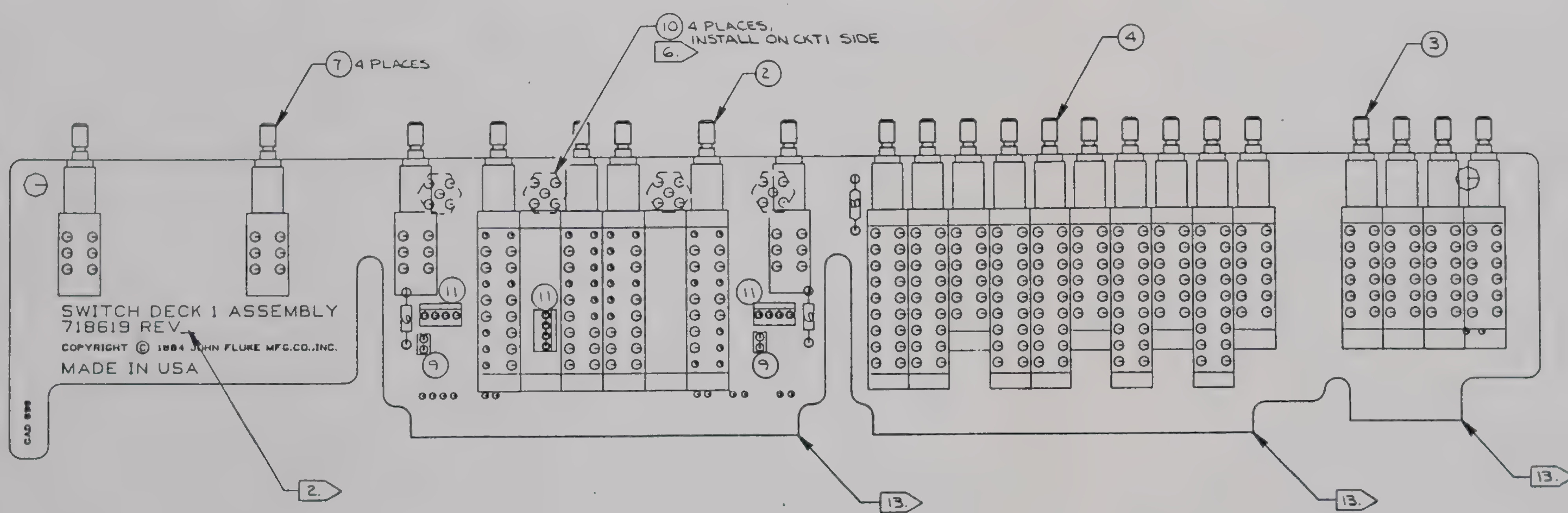

QTY	ITEM	PART NO	DRAWING NO	DESCRIPTION	REF DES
	17				
	16				
	15				
6	14	285353		SPACER, SWITCH	
	13				
	12				
3	11	631184		CONN.,POST HEADER,4 POS	12.
4	10	352450		CONNECTOR, BNC	11.
2	9	519157		CAP.,CERAM,50V,.22uF	10.
1	8	474445		RES.,MF,1/8W,5%,1K	R203
4	7	520437		SWITCH, DPDT, PUSH-PUSH	9.
2	6	188417		RES.,CC,1/4W,5%,3.9M	8.
	5				
1	4	473322	8010A-8006	SWITCH ASSEMBLY	11
1	3	729483	A21-50-8002	SWITCH,RELAY TIMER	22
1	2	729467	A21-50-8001	SWITCH, FREQ SIGNAL SELECT	S5-8
1	1	718585	A21-50-3004	P.C.B., SWITCH DECK 1	

PARTS LIST

8580A	8580A-8001	717585
BASIC	A21-50-5001	716233
DWG NO SUFFIX	DRAWING NO	PART NO
	FIRST USED ON	

APPLICATION

PROPRIETARY NOTICE

FLUKE 89536 — JOHN FLUKE MFG CO INC, P O BOX C9090, EVERETT WA 98206

DO NOT SCALE DRAWING. UNLESS OTHERWISE SPECIFIED: TOLERANCE; DIMENSIONS IN INCHES

DWN D.C. BARRETT 3/84
PROJ. ENGR T.E. ROBB
MFG. ENGR

FINISH

ASSEMBLY, SWITCH DECK #1

PART NO	SIZE	DRAWING NO
718619	D	A21-50-4004

SCALE 1.5:1 SH 1 OF 1

PROPRIETARY

REVISIONS						
LTR	DESCRIPTION	EFF	DWN	CHK	PROJ ENGR	MFG ENG
—	RELEASE TO PRODUCTION		DCB 6/14/84	[illegible]	[illegible] 7/16/84	[illegible] 7/3/84

NOTES: UNLESS OTHERWISE SPECIFIED

1. FOR SCHEMATIC DIAGRAM SEE A21-50-1001
2. MARK ASSEMBLY REVISION LETTER IN SPACE PROVIDED USING INK STAMP (PERMA DRI-177 OR EQUIVALENT).
3. ASSEMBLE PER S.O.P. 111.8
4. CLEAN ASSEMBLY PER S.O.P. 89.4.
5. LEADS TO BE .100 LG MAX.
6. REMOVE THIS AREA AFTER FLOW SOLDER. CUT TABS FLUSH OR BELOW P.C.B. EDGE.
7. S29-S36.

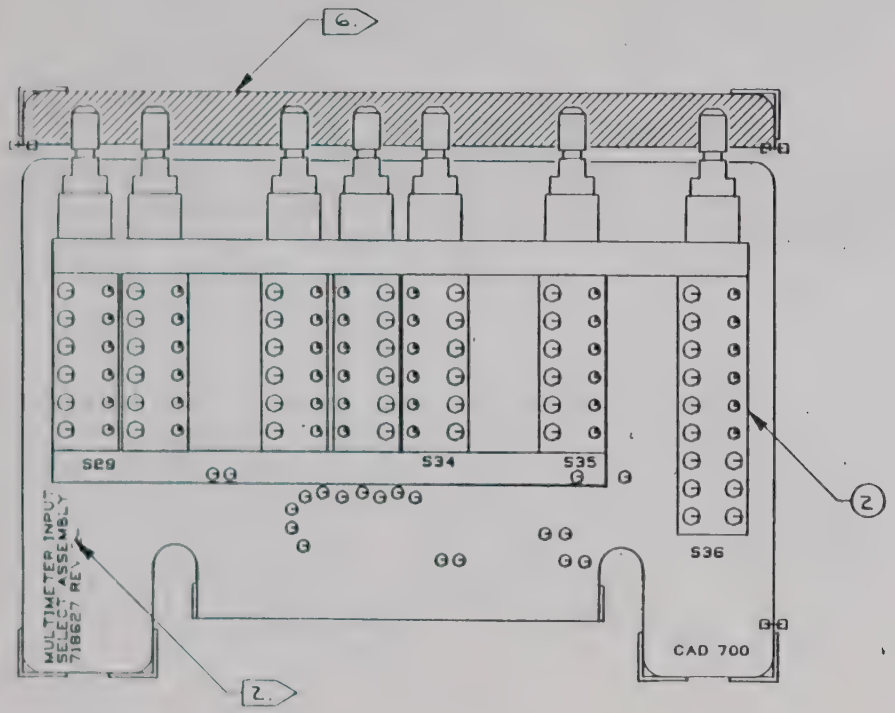

A21-50-4005
SH 1 OF 1 REV —

QTY	ITEM	PART NO.	DRAWING NO	DESCRIPTION	REF DES
1	2	729475	A21-50-8004	SWITCH, MULTI. INPUT	7
1	1	718593	A21-50-3005	P.C.B., SWITCH DECK #2	

PARTS LIST

2580A	2580A-5001	717595
BASIC	A21-50-5001	716233
DWG NO SUFFIX	DRAWING NO	PART NO
	FIRST USED ON	
APPLICATION		

PROPRIETARY NOTICE

This document and the technical data hereon disclosed are proprietary to John Fluke Mfg. Co., Inc. and shall not, without express written permission of John Fluke Mfg. Co., Inc. be used, released or disclosed in whole or in part or used to solicit quotations from a competitive source or used for manufacture by anyone other than John Fluke Mfg. Co., Inc. The information hereon has been developed at private expense and may only be used for purposes of engineering evaluation and for incorporation into technical specifications and other documents which specify procurement of products from John Fluke Mfg. Co., Inc.

FLUKE

JOHN FLUKE MFG. CO., INC.
P.O. BOX 43210
MOUNTLAKE TERRACE, WA 98043

89536

DO NOT SCALE DRAWING

UNLESS OTHERWISE SPECIFIED

TOLERANCE: XX ± ; XXX ± ; ANGLES ±

DIMENSIONS IN INCHES

DWN	D.C. BARRETT	3/30/84
CHK	[illegible]	8/15/84
PROJ ENGR	T. Ross	7/18/84
MFG ENGR	[illegible]	7/13/84
FINISH		

ASSEMBLY, MULTIMETER INPUT SELECT

PART NO	SIZE	DRAWING NO
718627	C	A21-50-4005

SCALE 2:1 SH 1 OF 1 REV —

LTR	DESCRIPTION	EFF	VAL / DATE		
				PROJ ENGR	MFG ENGR
—	RELEASE TO SPECIALS		R.C. 4-1 /82		

NOTES: UNLESS OTHERWISE SPECIFIED

1. FOR SCHEMATIC DIAGRAM SEE A21-44-1001.
2. ASSEMBLE PER S.O.P. 111.3.
3. CLEAN ASSEMBLY PER S.O.P. 89.4.
4. TRIM LEADS TO .10 MAX.
5. MARK ASSEMBLY REVISION LETTER IN SPACE PROVIDED USING INK STAMP (PERMA-DRI, 177 OR EQUIVALENT).

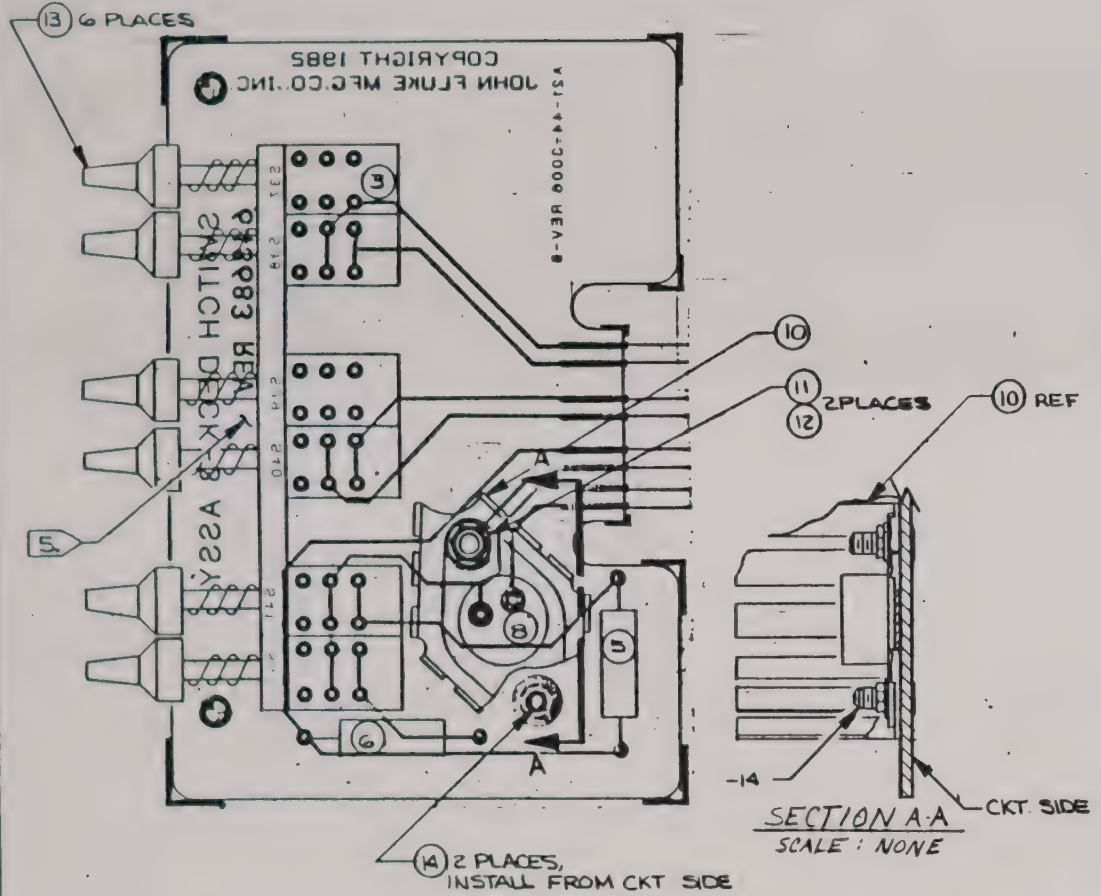

A21-44-4006
SH 1 OF 1 REV —

QTY	ITEM	PART NO.	DRAWING NO	DESCRIPTION	REF DES
2	14	603894		STUD, THREADED	
6	13	425900		BUTTON, LT. GREY	
2	12	110403		LOCKWASHER, #4INT	
2	11	110635		NUT #4-40	
1	10	631317		HEATSINK, T066	
	9				
1	8	385302		TRANSISTOR, 2N4240	Q256
	7				
1	6	151043		RESISTOR 1/2W, MF, 10Ω	R283
1	5	151324		RESISTOR 1/2W, MF, 1KΩ	R282
	4				
1	3	634352	A21-44-8005	SWITCH, RANGE SELECT	S37-42
	2				
1	1	648618	A21-44-3006	PCB, RANGE SELECT	A6

PARTS LIST

BASIC	A21-44	587394
DWG NO SUFFIX	DRAWING NO	PART NO.
	FIRST USED ON	
APPLICATION		

PROPRIETARY NOTICE
This document and the technical data hereon disclosed are proprietary to John Fluke Mfg. Co., Inc. and shall not without express written permission of John Fluke Mfg. Co., Inc. be used, released or disclosed in whole or in part, or used to serial duplicate from a competitive source or used for manufacture by anyone other than John Fluke Mfg. Co., Inc. The information hereon has been developed at private expense and may only be used for purposes of engineering evaluation and for incorporation into technical specifications and other documents which specify procurement of products from John Fluke Mfg. Co., Inc.

FLUKE
JOHN FLUKE MFG. CO., INC.
P.O. BOX 43210
MOUNTLAKE TERRACE, WA 98043

89536 DO NOT SCALE DRAWING

UNLESS OTHERWISE SPECIFIED
TOLERANCE: XX = ± XXX = ± ANGLES = ±
DIMENSIONS IN INCHES: X_C =

DWN	S. PETERSON	6 2 81
CHK	D.C. BARRETT	4/1/82
PROJ ENGR		
MFG ENGR		
FINISH		

RANGE SELECT SWITCH DECK ASSY

PART NO.	SIZE	DRAWING NO
648675	C	A21 44-4006
SCALE 2:1	SH 1 OF 1	REV —

REVISIONS						
LTR	DESCRIPTION	EFF	DWN	CHK	PROJ ENGR	MFG ENGR
–	RELEASE TO PRODUCTION		DCB 6/15/84	[illegible]	[illegible]	[illegible] 7/10/84

NOTES: UNLESS OTHERWISE SPECIFIED

1. FOR SCHEMATIC DIAGRAM SEE A21-50-1001.
2. MARK ASSEMBLY REVISION LETTER IN SPACE PROVIDED USING INKSTAMP (PERMA-DRI 177 OR EQUIVALENT).
3. ASSEMBLE PER S.O.P. 111.8.
4. CLEAN ASSEMBLY PER S.O.P. 89.4.
5. LEADS TO BE .100 LONG MAX.

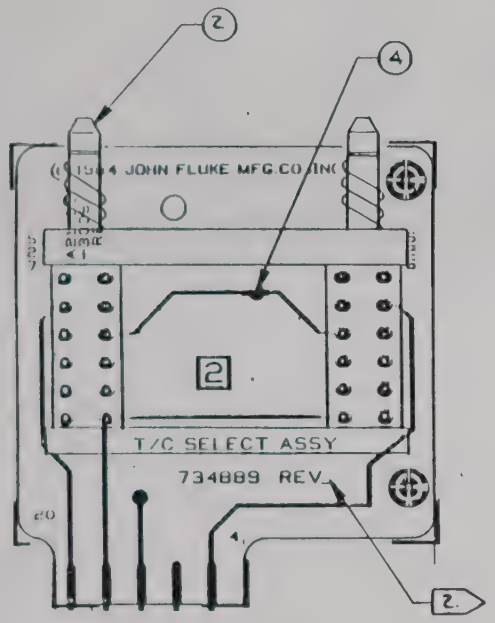

A21-50-4008
SH 1 OF 1 REV –

QTY	ITEM	PART NO.	DRAWING NO	DESCRIPTION	REF DES
	7				
	6				
	5				
1	4	512889		TEST POINT	
	3				
1	2	634337	A21-44-8003	SWITCH, T/C SELECT	S26,27
1	1	734897	A21-50-3008	P.C.B., T/C SELECT	

PARTS LIST

2590FTS	2590A 5001	717595
BASIC	A21 50-5001	716233
DWG NO SUFFIX	DRAWING NO	PART NO
	FIRST USED ON	
APPLICATION		

PROPRIETARY NOTICE

This document and the technical data hereon disclosed are proprietary to John Fluke Mfg. Co., Inc. and shall not without express written permission of John Fluke Mfg. Co., Inc. be used, released or disclosed in whole or in part, or used to solicit quotations from a competitive source or used for manufacture by anyone other than John Fluke Mfg. Co., Inc. The information hereon has been developed at private expense and may only be used for purposes of engineering evaluation and for incorporation into technical specifications and other documents which specify procurement of products from John Fluke Mfg. Co., Inc.

FLUKE

89536

JOHN FLUKE MFG. CO., INC.
P.O. BOX C9090
EVERETT, WA 98206

DO NOT SCALE DRAWING

UNLESS OTHERWISE SPECIFIED

TOLERANCE
XX = ±
XXX = ±
ANGLES = ±

DIMENSIONS IN INCHES

DWN	D.C. BARRETT	4/19/84
CHK	[illegible]	7/8/84
PROJ ENGR	T. L. ROBB	7/10/84
MFG ENGR	A. K. [illegible]	7/16/84
FINISH		

ASSEMBLY, THERMO-COUPLE SELECT P.C.B.

PART NO	SIZE	DRAWING NO
734889	C	A21-50-4008
SCALE 2 X	SH 1 OF 1	REV –

NOTES: UNLESS OTHERWISE SPECIFIED

101. FOR WIRE DIAGRAM SEE A21-50-1301.

102. FOR SCHEMATIC DIAGRAM SEE A21-50-1001.

103. ASSEMBLE PER S.O.P. 111.8.

104. SEE SHEET 10 FOR WIRE LIST.

105. **WARNING:** ⊗ INDICATES USAGE OF MOS DEVICE(S) WHICH MAY BE DAMAGED BY STATIC DISCHARGE. USE SPECIAL HANDLING PER S.O.P. 19.1

106. R80,R151,R181,R264,R280,R289.

107. R152,R182.

108. R153/S43, R174/S44.

109. R79, R265, R281, R290.

110. R150, R180

QTY	ITEM	PART NO	DRAWING NO	DESCRIPTION
	172			
4	171	745943		WASHER, FLAT, NYLON, 3/8"
2	170	237172		SOLDER LUG, #8
10	169	745877		ISOLATING WASHER
5	168	441972		SOLDER LUG, 3/8"
1	167	177022		SCREW, #6-32X3/8",SEMS
1	166	228890		SCREW, #8-32X1/4",PHP
1	165	721076		SPACER,BRASS,#8-32X1/2"
1	164	381020		SPACER,NYLON,#6-32X3/4"
	163			
12	162	407908		ANCHOR, CABLE TIE
34	161	172080		CABLE TIE,4" LG.
	160			
	159			
3.51IN	158	196683		HEATSHRINK, 1/2" I.D.
.20FT	157	113852		HEATSHRINK, #12
.70FT	156	149450		HEATSHRINK, #14
.30FT	155	135814		WIRE,TEF,#18AWG,BLACK
.59FT	154	528687		WIRE,TEF,#18 AWG,RED
7.88FT	153	115667		WIRE,TEF,#22 AWG,WHITE
6.12FT	152	115816		WIRE,TEF,#22 AWG, GRAY
3.96FT	151	115808		WIRE,TEF,#22 AWG, PURPLE
2.80FT	150	115675		WIRE,TEF,#22 AWG, BLUE
1.95FT	149	115659		WIRE,TEF,#22 AWG, GREEN
3.25FT	148	115584		WIRE,TEF,#22 AWG, YELLOW
5.50FT	147	115790		WIRE,TEF,#22 AWG, ORANGE
4.71FT	146	115576		WIRE,TEF,#22 AWG, RED
8.46FT	145	115774		WIRE,TEF,#22 AWG, BLACK
5.00FT	144	115782		WIRE,TEF,#22 AWG, BRN
2	143	110510		HEX NUT, 3/8" - 32
8	142	195255		HEX NUT, KEPS, #4-40
2	141	110601		HEX NUT, 1/4" - 32
1	140	110320		LOCKWASHER, INT, #8
4	139	129957		LOCKWASHER, INT, 3/8"
2	138	110817		LOCKWASHER, INT, 1/4"
1	137	631291		WASHER, NON-TURN, 3/8"
1	136	644021		CONN., BAYONET, 3 PIN
1	135	643809		CONN., BAYONET, 4 PIN
4	134	631192		CONN., SOCKET, 9 POS
1	133	631200		CONN., SOCKET, 6 POS
4	132	631218		CONN., SOCKET, 4 POS
3	131	152033		CONN., BNC
	130			
2	129	655001		CONNECTOR, FASTON, 3/16"
2	128	460238		FUSE HOLDER, CAP
2	127	460239		FUSE HOLDER, BODY
1	126	109173		FUSE,250V,2A,FA
1	125	109199		FUSE,250V,3A,FA
1	124	615054		SWITCH,ROCKER,DPDT
	123			
	122			
	121			
1	120	723809		L.E.D., GREEN
2	119	734905		RF CABLE ASSY, 17IN
2	118	438226		RF CABLE ASSY, 15IN
1	117	733782		RES.,VARI.CERMET,1T,250K
2	116	682914		RES.,VARI.WW,10T,200K
4	115	682922		RES.,VARI.WW,10T, 1K
2	114	631457		RES.,VARI,W/SWITCH,100K
2	113	682948		RES.,VARI.W.W.,10T,100K
6	112	682930		RES.,VARI.WW,10T,10K
1	111	734913	A21-50-4405	THRESHOLD ADJUST CABLE
2	110	727667	A21-50-2702	BINDING POST ASSY,RED
1	109	727659	A21-50-2703	BINDING POST ASSY, BLACK
4	108	341404	100-200-208	POINTER KNOB ASSY
14	107	341396	800-200-207	KNOB ASSY
1	106	716233	A21-50-4004	MULTIMETER INPUT ASSY
	105			
1	104	634741	A21-44-8008	SWITCH,TAP,[illegible]
2	103	651614	A21-44-4404	ADJUSTING SCREW ASSY
2	102	655426	A21-44-2311	[illegible] SWITCH
1	101	[illegible]	A21-50-[illegible]	[illegible]

QTY ITEM PART NO DRAWING NO DESCRIPTION

PARTS LIST

ITEM	DESCRIPTION	DATE
A	SHT 1-4 ITEM 101 WAS 722447, DEL ITEM 105 ADDED ITEM 118,119,129 & 168 171 QTY ITEM 145 WAS 1 QTY ITEM 139 WAS 1 P/N ITEM 131 WAS 38-888. ADDED DETAIL II & III. SHT 6: P/N ITEM 238 WAS 195655. P/N ITEM 239 WAS 405417 QTY ITEM 236 WAS 3.	
-	RELEASE TO PRODUCTION	

A21-50-5001 SH 1 OF 10 REV A

CAUTION
SUBJECT TO DAMAGE BY STATIC ELECTRICITY

PROPRIETARY NOTICE
This document and the information disclosed herein are the property of John Fluke Mfg. Co., Inc. and shall not be reproduced in whole or in part without written permission. Fluke Mfg. Co., Inc. is willing to disclose its contents to customers or other interested parties in connection with the purchase of Fluke products, but such disclosure does not convey any rights to reproduce or disclose its contents or to manufacture, use or sell anything that it may describe, in whole or in part. Any reproduction of this drawing or portions thereof without the express written permission of John Fluke Mfg. Co., Inc. is prohibited. If this drawing is loaned, it is subject to recall at any time. By accepting this drawing, the borrower agrees that he will neither use nor permit others to use the information disclosed herein for any purpose not specifically authorized by John Fluke Mfg. Co., Inc. and that he will return this drawing to John Fluke Mfg. Co., Inc. upon demand and will not make or retain copies hereof.

BASIC DWG NO SUFFIX	DRAWING NO	PART NO
APPLICATION	FIRST USED ON	

FLUKE 89536

JOHN FLUKE MFG CO INC
P O BOX C9090
EVERETT WA 98206

DO NOT SCALE DRAWING

UNLESS OTHERWISE SPECIFIED
TOLERANCES
DIMENSIONS IN INCHES
ANGLES ±1°

MFG'S MATERIAL
FINISH
MFG'S FINISH

FINAL ASSEMBLY
(GROUP-01)

PART NO	SIZE	DRAWING NO
716233	D	A21-50-5001
SHT —	SH 1 OF 10	REV A

PROPRIETARY

SEE SHEET 1 FOR REVISIONS

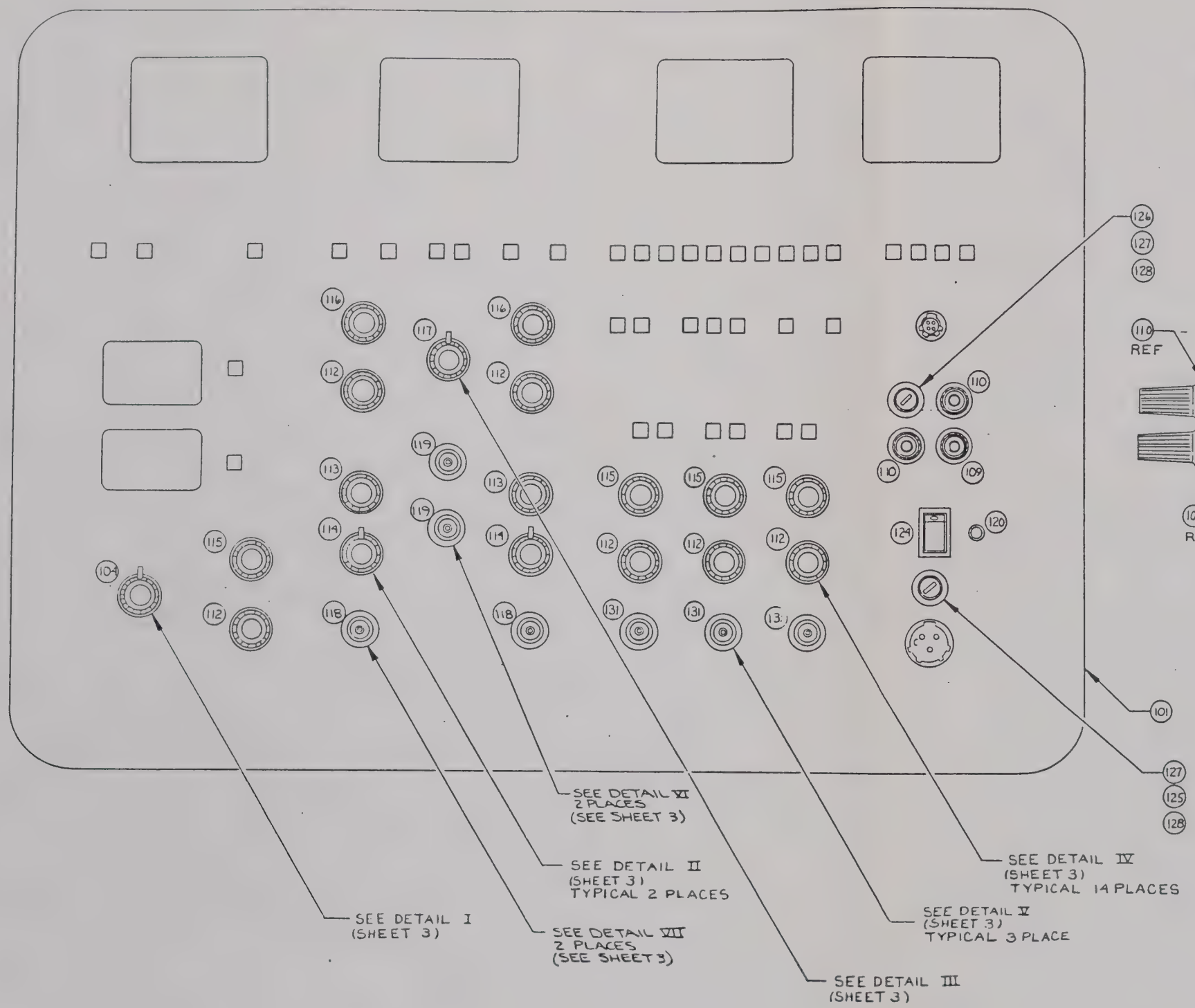

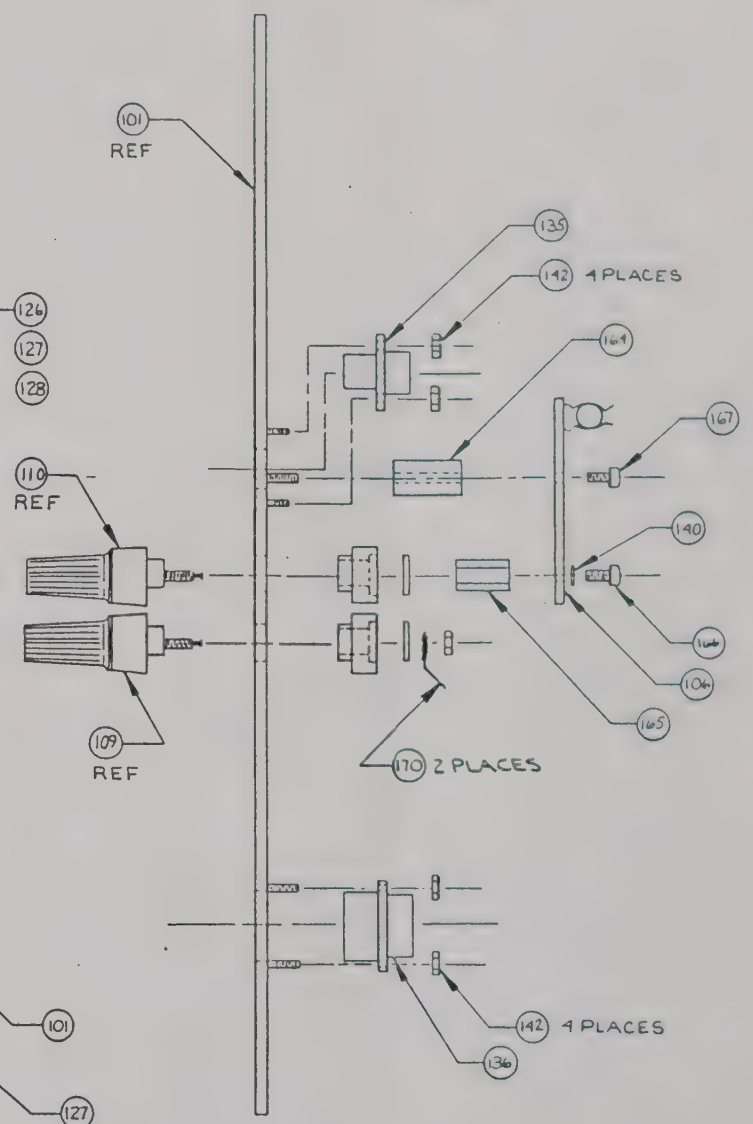

SEE SHEET 1 FOR PARTS LIST

QTY	ITEM	PART NO	DRAWING NO	DESCRIPTION

PARTS LIST

CAUTION
SUBJECT TO DAMAGE BY STATIC ELECTRICITY

PROPRIETARY NOTICE

FLUKE 89536 — JOHN FLUKE MFG CO INC, P O BOX C9090, EVERETT WA 98206

DRAWN: L MANSON 11-17-64
CHK'D:
ENGR: T L ROBB 11/21/64
MFG ENGR: A K DOSS 11/21/64

FINAL ASSEMBLY (GROUP 01)

PART NO	SIZE	DRAWING NO
716233	D	A21-50-5001

PROPRIETARY

A21-50-5001 SH 3 OF 10 REV A

SEE SHEET 1 FOR REVISIONS

INSTRUCTIONS:

AFTER (104) IS INSTALLED, TURN SWITCH ALL THE WAY CCW. THEN INSTALL (108) SO POINTER IS IN THE "J" POSITION.

INSTRUCTIONS:

REMOVE ONE SET SCREW FROM (108) AND LOOSEN THE SECOND SET SCREW. SLIP (102) INTO (108) AND ALIGN SUCH THAT THE SET SCREW HOLE IN (102) MATCHES THE EMPTY SET SCREW HOLE IN (108). SECURE BY TIGHTENING THE SECOND SET SCREW IN (108). PLACE (108) AND (102) OVER THE SHAFT OF (114) AND SECURE THE ASSEMBLY BY REINSTALLING AND TIGHTENING THE FIRST SET SCREW.

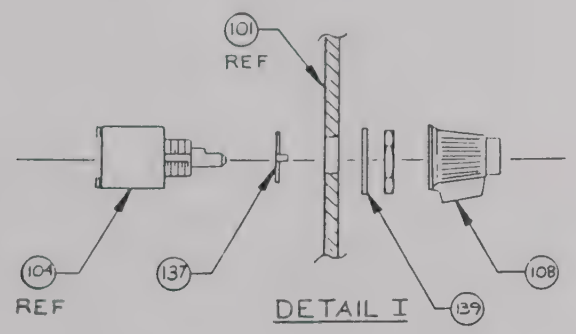

DETAIL I

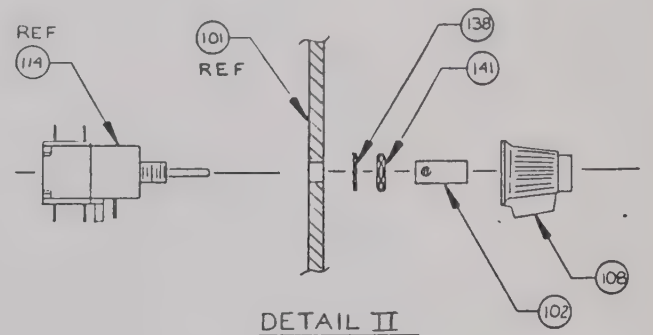

DETAIL II
2 PLACES

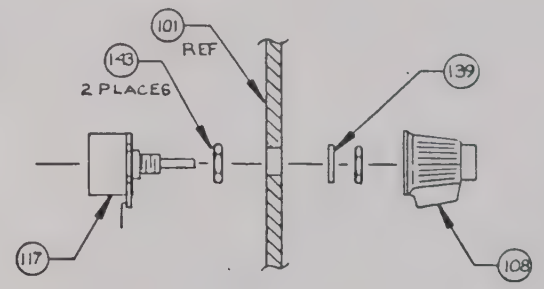

DETAIL III

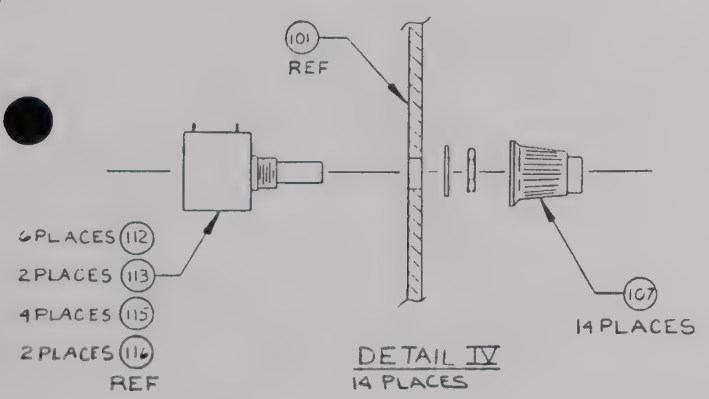

DETAIL IV
14 PLACES

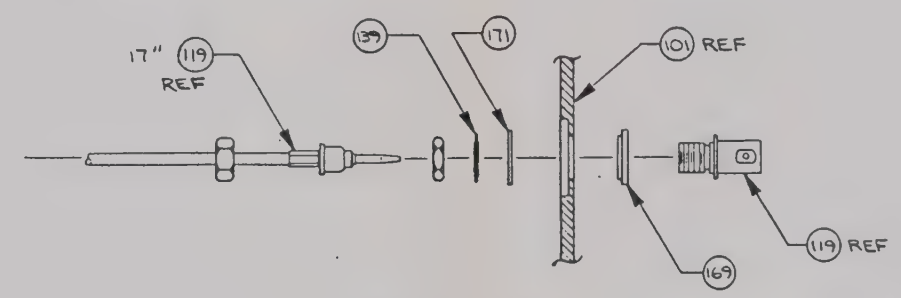

DETAIL VI
2 PLACES

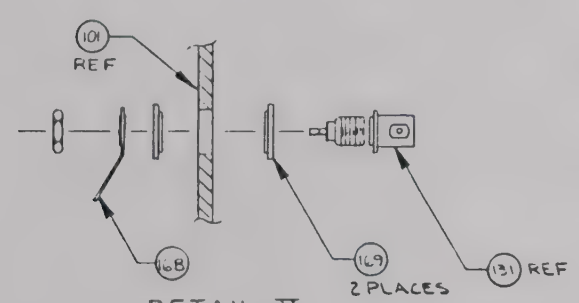

DETAIL V
3 PLACES

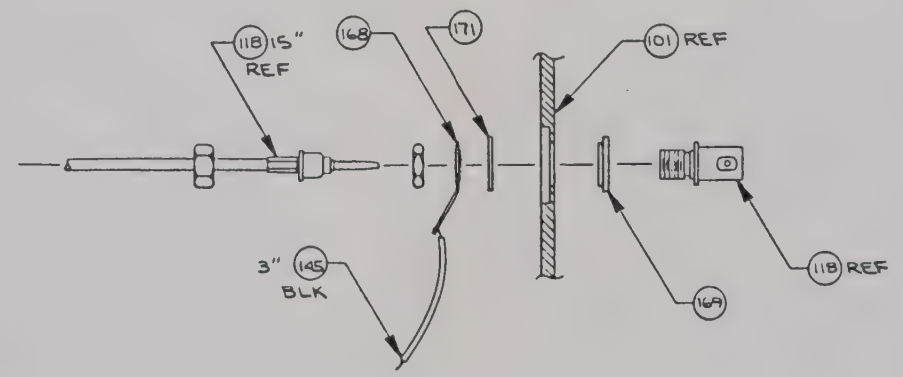

DETAIL VII
2 PLACES

SEE SHEET 1 FOR PARTS LIST

QTY	ITEM	PART NO	DRAWING NO	DESCRIPTION	REF

PARTS LIST

CAUTION
SUBJECT TO DAMAGE BY STATIC ELECTRICITY

BASIC		
DWG NO SUFFIX	DRAWING NO	PART NO
	FIRST USED ON	
APPLICATION		

PROPRIETARY NOTICE

FLUKE — JOHN FLUKE MFG CO. INC, P O BOX C9090, EVERETT WA 98206

89536 — DO NOT SCALE DRAWING

UNLESS OTHERWISE SPECIFIED: TOLERANCE — DIMENSIONS IN INCHES

DWN E. HANSON — CHK — PROJ ENGR T L ROBB — MFG ENGR A K WEISS — FINISH

FINAL ASSEMBLY (GROUP 01)

PART NO	SIZE	DRAWING NO
716233	D	A21-50-5001

SCALE 1:1 — SH 4 OF 10 — REV A

PROPRIETARY

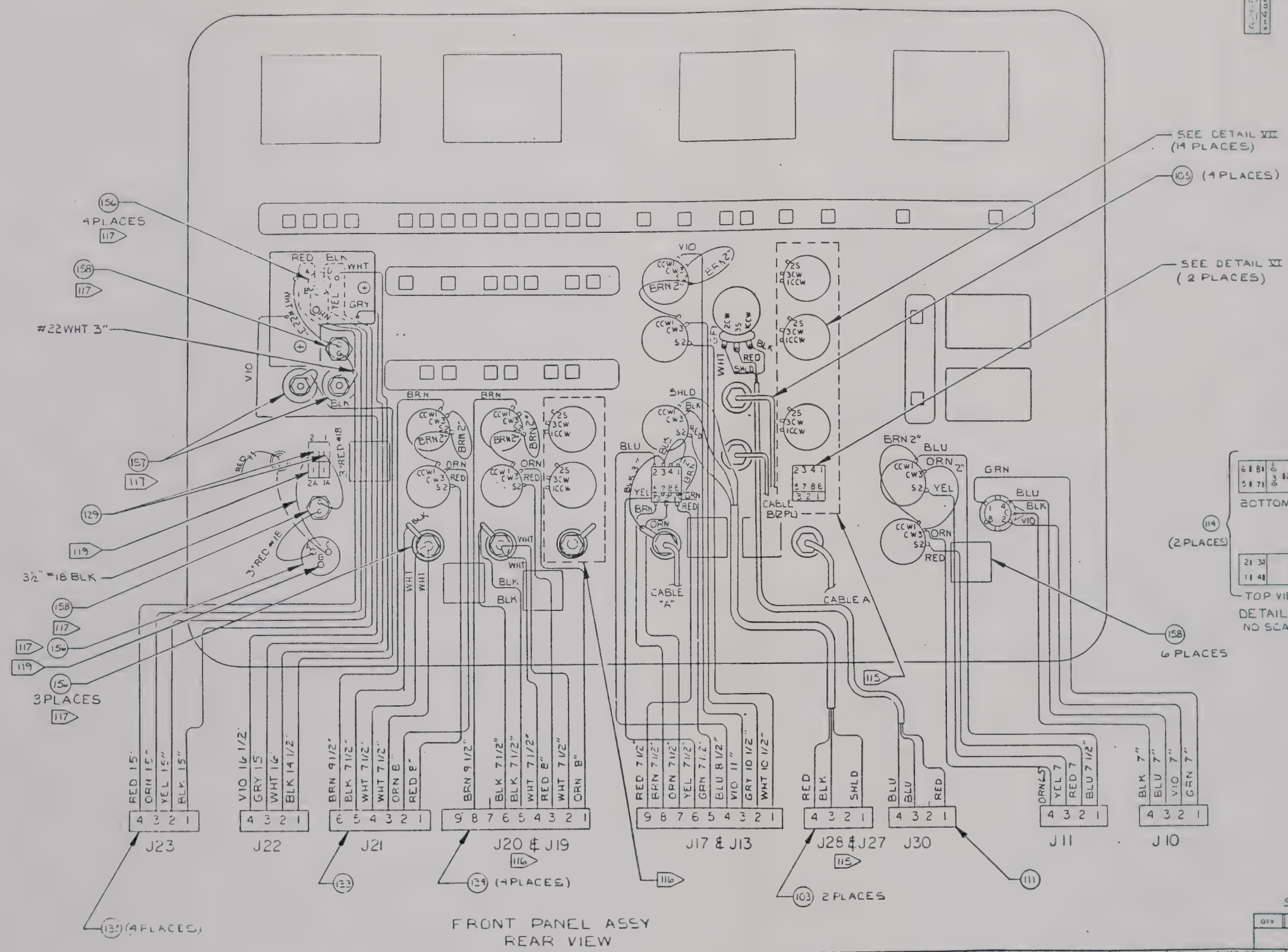

FRONT PANEL ASSY
REAR VIEW

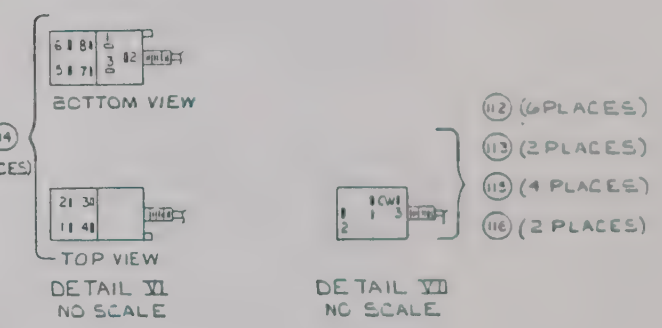

NOTES: (CONT'D FROM SHEET 1)

115 WIRE AS SHOWN FOR J17

116 WIRE AS SHOWN FOR J20

117 SLEEVE SOLDER CONNECTIONS INDICATED WITH HEATSHRINK. CUT HEATSHRINK TO NECESSARY LENGTH.

118 INSTALL AS REQUIRED ON GROUPS -01 & -02.

119 INSTALLATION OF PARTS OF ITEM 215 (GRP-02) IS PERMISSIBLE AT THIS LEVEL. SEE SHEET 8 FOR CORRECT INSTALLATION

SEE SHEET 1 FOR PARTS LIST AND NOTES

QTY	ITEM	PART NO	DRAWING NO	DESCRIPTION	REF DES

PARTS LIST

CAUTION
SUBJECT TO DAMAGE BY STATIC ELECTRICITY

PROPRIETARY NOTICE

FLUKE 89536

JOHN FLUKE MFG CO INC
P O BOX C9090
EVERETT WA 98206

DO NOT SCALE DRAWING

UNLESS OTHERWISE SPECIFIED
TOLERANCE
DIMENSIONS IN INCHES

DWG NO SUFFIX | DRAWING NO | PART NO | FIRST USED ON | APPLICATION

FINAL ASSY
(GROUP 01)

PART NO	SIZE	DRAWING NO
716233	D	A21-50-5001

PROPRIETARY

A21-50-5001 REV A

LTR	DESCRIPTION	DFD	APPVD	DATE

SEE SHEET 1 FOR REVISIONS

NOTES: UNLESS OTHERWISE SPECIFIED

201. ASSEMBLE PER S.O.P. 111.F.

202 INSTALL ITEM 249 USING PERMA-BOND OR EQUIVALENT

203 CUT JUMPERS AS SHOWN FOR "JR301".

204 PROGRAM ITEM 221 PER DRAWING A21-50-4501T.

205. CONNECT ALL WIRES AND CABLING PER SHEET 8.

206. **WARNING:** ⊗ INDICATES USAGE OF MOS DEVICE(S) WHICH MAY BE DAMAGED BY STATIC DISCHARGE. USE SPECIAL HANDLING PER S.O.P. 19.1

QTY	ITEM	PART NO	DRAWING NO	DESCRIPTION	
1	254	166322		BRACKET, ANGLE	
1	253	333989		WASHER, FIBER, #10	
1	252	295048		SHOULDER WASHER, NYLON	
31	251	425900	8040A-2001-1	BUTTON, FUNCTION SWITCH	
6	250	426759	8040A-2001-2	BUTTON, RANGE SWITCH	
2	249	100073		GROMMET, RUBBER	
.13FT	248	113852		HEATSHRINK	
.55FT	247	115659		WIRE,TEF,#22AWG, GREEN	
.55FT	246	115782		WIRE,TEF,#22AWG,BROWN	
.55FT	245	115816		WIRE,TEF,#22AWG,GRAY	
10	244	110270		WASHER,FLAT,#6	
3	243	110288		WASHER,FLAT,#8	
6	242	115006		SCREW,#6-32X1/2",NYLON	
4	241	130021		WASHER,FLAT,PREMOLD, #4	
4	240	353060		SCREW,#4-40X1/2",SEMS	
4	239	146225		WASHER, FLAT, #4	
4	238	745869		PUSH-RIVIT, PLASTIC	
2	237	658088		SHOULDER SCREW,#8-32X1/4"	
1	236	281196		SCREW,#4-40X3/8",SEMS	
27	235	177022		SCREW,#6-32X3/8",SEMS	
1	234	110536		HEX NUT, #10-32	
	233				
2	232	272591		SCREW,#6-32X5/8",SEMS	
8	231	110841		HEX STOP NUT, #6-32	
10	230	298836	8400A-2031	CARD GUIDE	
1	229	631218		CONN.,SOCKET, 4 POS	
	228				
4	227	508630		INSULATOR, TO-220	
1	226	306217		INSULATOR, TO-3	
1	225	342816		SOCKET, TO-3	
	224				
	223				
	222				
1	221	454603		I.C., EPROM 2716	U10
1	220	535310		I.C.,UP W/PROM SOCKET 28	U4
1	219	523639		TRANSISTOR NPN 2N5038	Q402
1	218	508242		DIODE,25A, 1N6096	CR415
1	217	631937		LINE FILTER	
1	216	722363	A21-50-8004	SHIELD,MAIN P.C.B. ASSY	
1	215	655456	A21-44-4409	POWER CABLE ASSY	
1	214	651331	A21-44-2502	HINGE ARM, MODIFIED	
2	213	464123	2180A-2003	INPUT DRAWER	
1	212	727925	A21-50-2004	ISOTHERMAL SUPPORT BRACKET	
1	211	727941	A21-50-2007	FREQUENCY COUNTER SHIELD	
2	210	727917	A21-50-2003	INTERNAL SUPPORT BRACKET	
1	209	727958	A21-50-2701	CHASSIS FRAME ASSY	
1	208	727933	A21-50-2006	POWER SUPPLY SHIELD	
1	207	734889	A21-50-4008	T/C SELECT ASSY	
1	206	648675	A21-44-4006	SWITCH DECK #3, ASSY	
1	205	718627	A21-50-4005	MULTI INPUT SELECT. ASSY	
1	204	718619	A21-50-4004	SWITCH DECK #1, ASSY	
1	203	648642	A21-44-4003	DISPLAY P.C.B., ASSY	
2	202	648634	A21-44-4002	T/C INPUT P.C.B., ASSY	
1	201	718403	A21-50-4001	MAIN P.C.B. ASSEMBLY	

PARTS LIST

CAUTION
SUBJECT TO DAMAGE BY STATIC ELECTRICITY

PROPRIETARY NOTICE

JOHN FLUKE MFG CO INC
P O BOX C9090
EVERETT WA 98209

89536

DO NOT SCALE DRAWING

UNLESS OTHERWISE SPECIFIED
TOLERANCE
DIMENSIONS IN INCHES

DRAWN D C BAUREIS 5/1/84
ENG
PROJ ENGR T L ROSE 5/1/84
MFG ENGR A K JESS 5/1/84
FINISH

FINAL ASSEMBLY
(GROUP-02)

PART NO	SIZE	DRAWING NO
716233	D	A21-50-5001

SHT — OF — REV A

BASIC
DWG NO | DRAWING NO | PART NO
SUFFIX | FIRST USED ON
APPLICATION

PROPRIETARY

SEE SHEET 1 FOR REVISIONS

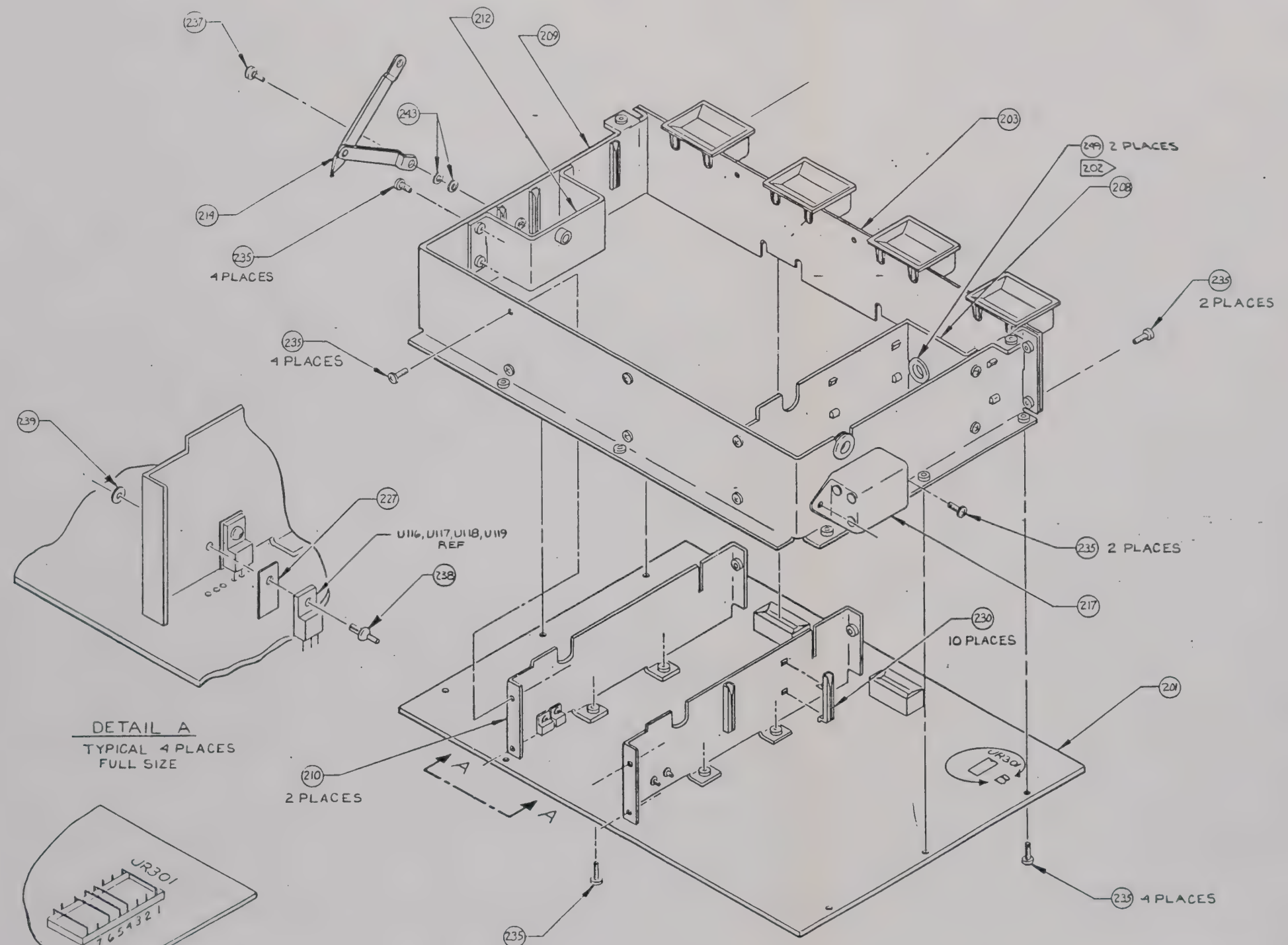

DETAIL A
TYPICAL 4 PLACES
FULL SIZE

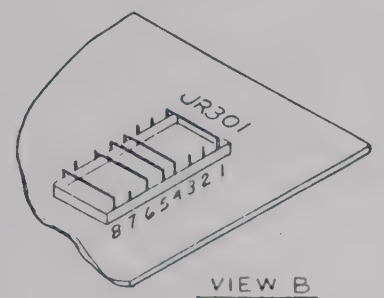

VIEW B
NO SCALE
203

CAUTION
SUBJECT TO DAMAGE BY
STATIC ELECTRICITY

SEE SHEET 5 FOR PARTS LIST

PARTS LIST

QTY	ITEM	PART NO.	DRAWING NO	DESCRIPTION	MFR CODE

BASIC DWG NO / SUFFIX	DRAWING NO	PART NO
APPLICATION	FIRST USED ON	

PROPRIETARY NOTICE

FLUKE 89536

JOHN FLUKE MFG CO INC
P O BOX C9090
EVERETT, WA 98206

DO NOT SCALE DRAWING

UNLESS OTHERWISE SPECIFIED
TOLERANCE
DIMENSIONS IN INCHES
ANGLES ±

DRAWN	E HANSON	4-27-84
CHK		
PROJ ENGR	T L ROBB	5/1/84
MFG ENGR	M K JEAN	5/1/84

FINISH

FINAL ASSEMBLY
GROUP 02

PART NO	SIZE	DRAWING NO
716233	D	A21-55-5001

SCALE 1/2 SHT 4 OF 5 REV A

PROPRIETARY

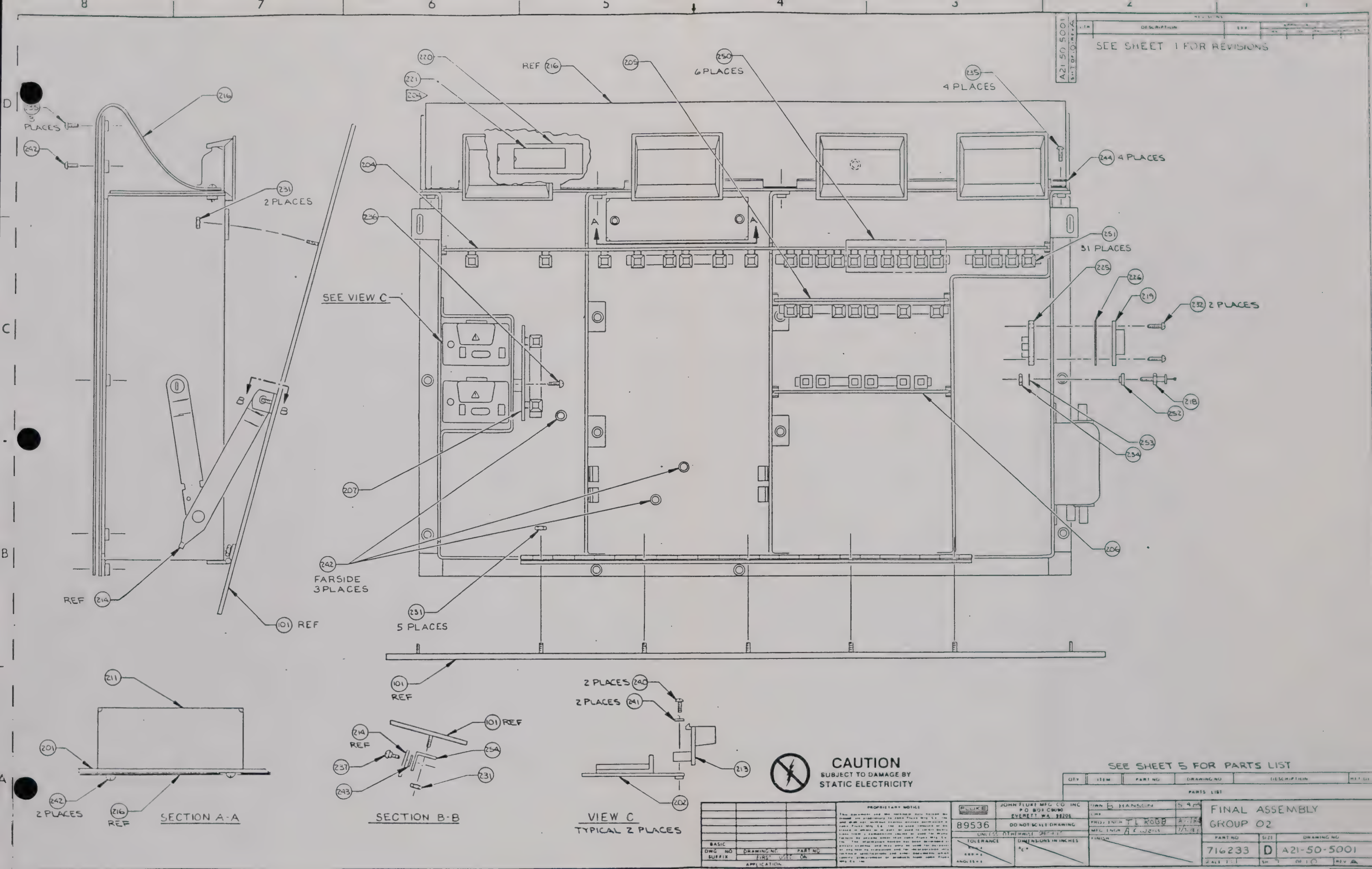

SEE SHEET 1 FOR REVISIONS
A21-50-5001
REF 216
6 PLACES
4 PLACES
4 PLACES
2 PLACES
31 PLACES
2 PLACES
SEE VIEW C
FARSIDE 3 PLACES
5 PLACES
REF 214
101 REF
101 REF
2 PLACES
2 PLACES
SECTION A-A
SECTION B-B
VIEW C
TYPICAL 2 PLACES
CAUTION
SUBJECT TO DAMAGE BY STATIC ELECTRICITY
SEE SHEET 5 FOR PARTS LIST
PARTS LIST
FINAL ASSEMBLY
GROUP 02
FLUKE
JOHN FLUKE MFG CO INC
P O BOX C9090
EVERETT WA 98206
89536
DO NOT SCALE DRAWING
UNLESS OTHERWISE SPECIFIED
TOLERANCE
DIMENSIONS IN INCHES
DWN B HANSON
PROJ ENGR T L ROBB
MFG ENGR A K WEBB
FINISH
PART NO 716233
SIZE D
DRAWING NO A21-50-5001
SCALE 1:1
SH 9 OF 10
REV A
PROPRIETARY

SEE SHEET 1 FOR REVISIONS

A21-50-5001 SH 8 OF 10 REV A

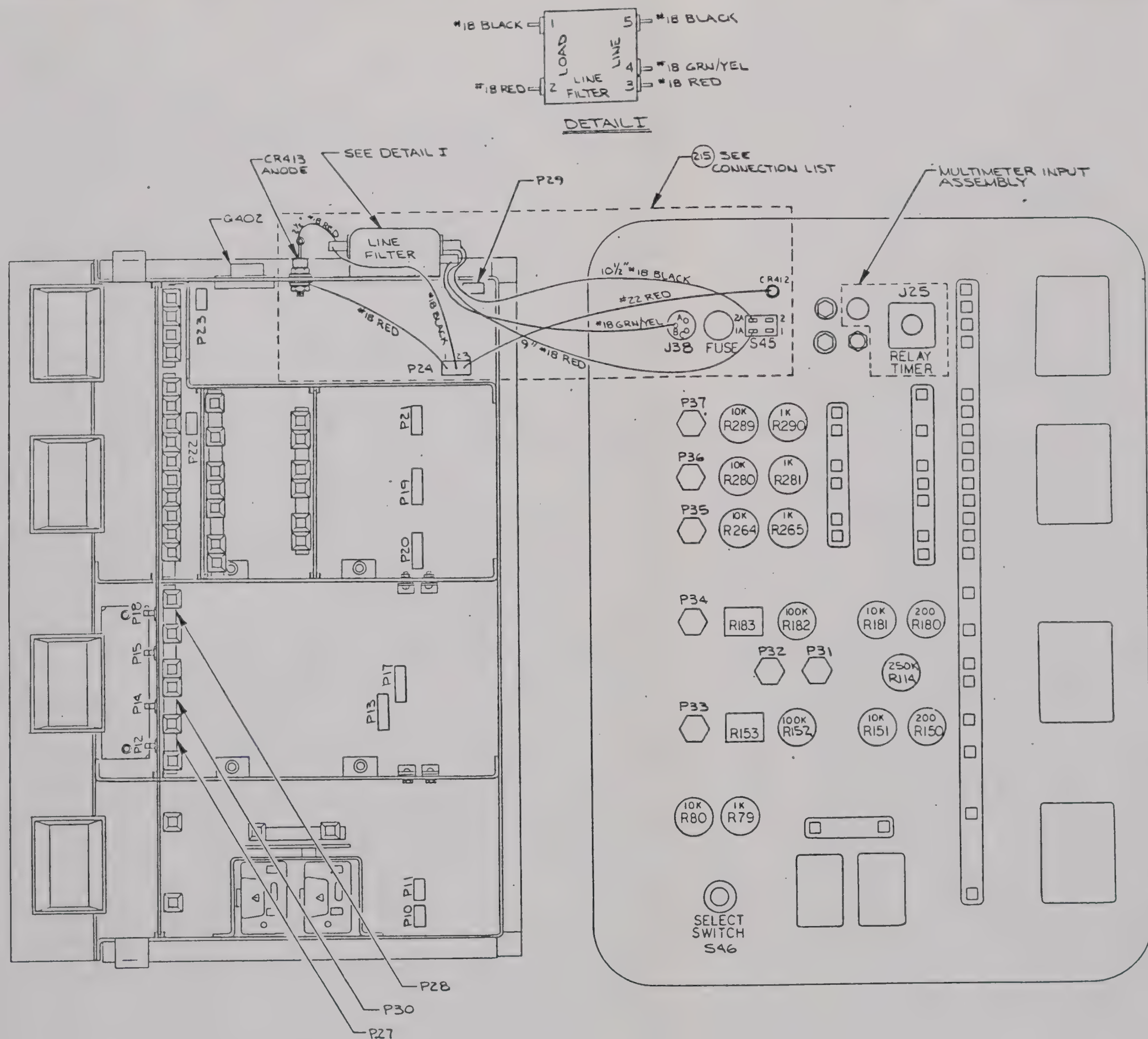

ITEM 215 CONNECTION LIST		
WIRE	FROM	TO
#18 GRN/YEL	J38-B	L F PIN 4
#18 RED	S45-1A	L F PIN 3
#18 BLACK	S45-2A	L F PIN 5
#18 RED	P24-1	CR413 (CATHODE)
#18 BLACK	P24-2	L.F. PIN 1
#22 RED	P24-3	CR412 (RED)
#18 RED	CR413 (ANODE)	L.F. PIN 2

CABLE CONNECTIONS	
FROM	TO
MULTIMETER INPUT ASSY	P22
RELAY TIMER (J25)	P23
Q402	P29
P37, R289 & R290	P21
P36, R280 & R281	P19
P35, R264 & R265	P20
R180, R181 & R183	P17
R114	P30
R182	P28
R150, R151 & R153	P13
R152	P27
P34	P18
P33	P12
P32	P15
P31	P14
R79 & R80	P11
SELECT SWITCH (S46)	P10

SEE SHEET 5 FOR PARTS LIST

QTY	ITEM	PART NO	DRAWING NO	DESCRIPTION

PARTS LIST

CAUTION
SUBJECT TO DAMAGE BY STATIC ELECTRICITY

PROPRIETARY NOTICE

FLUKE — JOHN FLUKE MFG CO INC, P O BOX C9090, EVERETT WA 98206

89536

DO NOT SCALE DRAWING

UNLESS OTHERWISE SPECIFIED DIMENSIONS IN INCHES

DWN E. HANSON 5-4-04

FINAL ASSEMBLY
GROUP 02

PART NO 716233 SIZE D DRAWING NO A21-50-5001

REV A

APPLICATION: BASIC DWG NO SUFFIX / DRAWING NO / PART NO / FIRST USED ON

PROPRIETARY

A21-50-5001

SEE SHEET 1 FOR REVISIONS

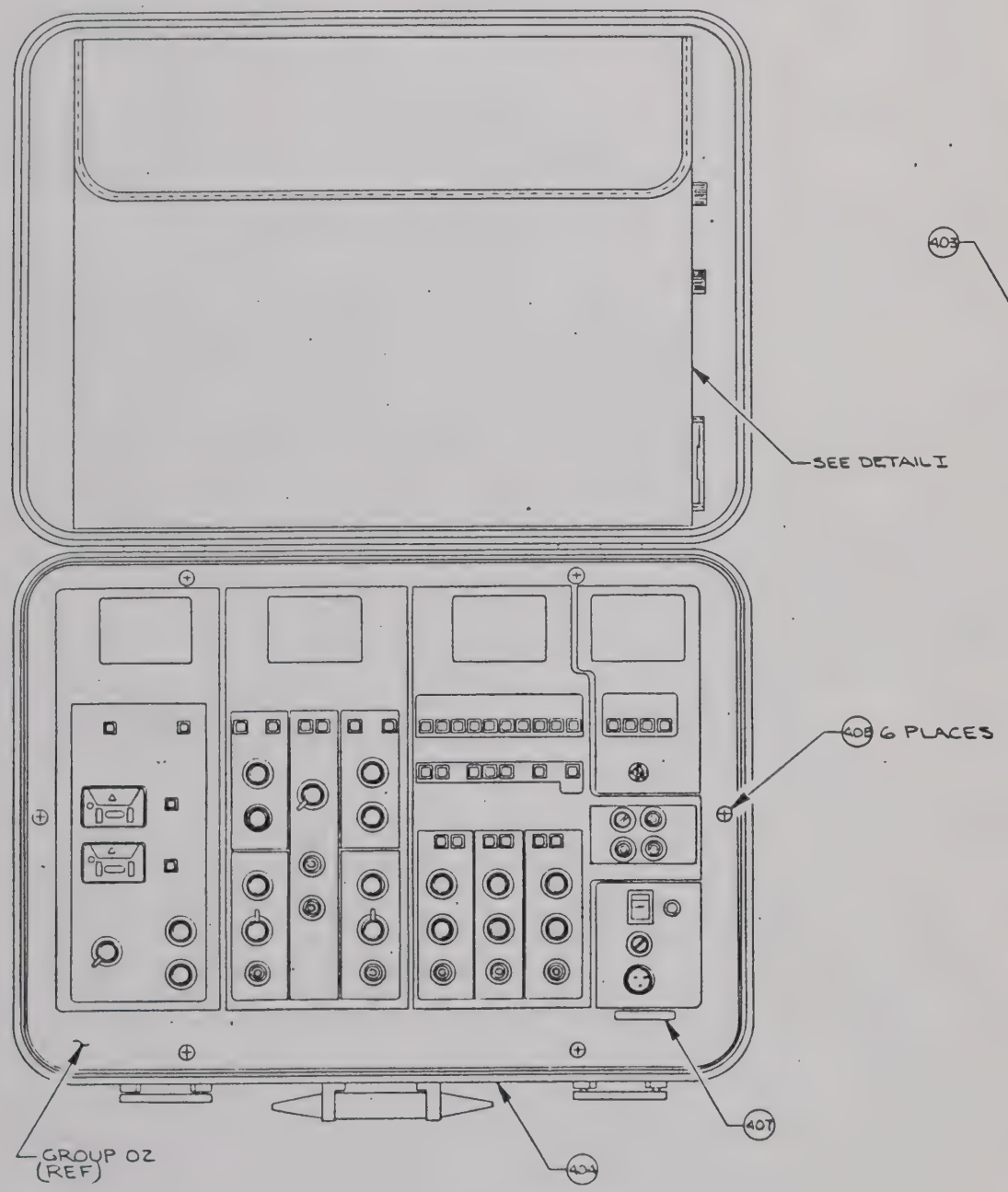

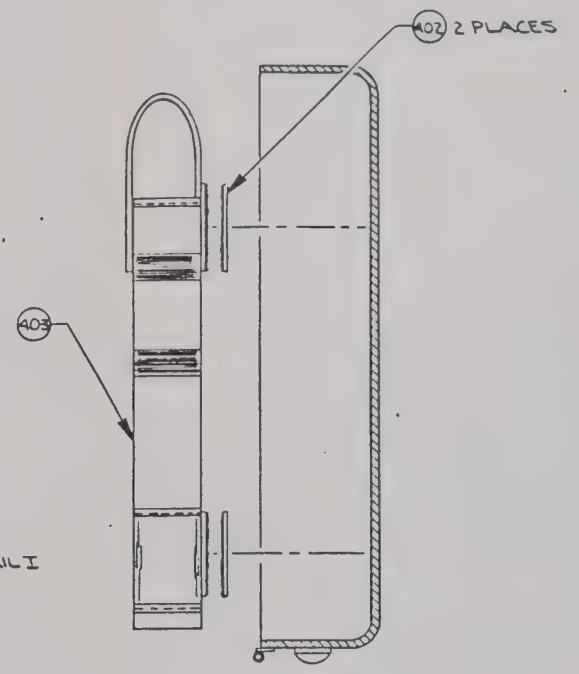

NOTES: UNLESS OTHERWISE SPECIFIED

401. TEST PER TEST PROCEDURE A21-50-150.

402. FOR SCHEMATIC DIAGRAM SEE A21-50-1001.

403. **WARNING:** ⊗ INDICATES USAGE OF MOS DEVICE(S) WHICH MAY BE DAMAGED BY STATIC DISCHARGE. USE SPECIAL HANDLING PER S.O.P. 19.1

QTY	ITEM	PART NO	DRAWING NO	DESCRIPTION	REF
	410				
	409				
6	408	740456		SCREW, LT. PEWTER, #10-32	
1	407	472795	M00-800-579	NAMEPLATE, SERIAL NUMBER	
	406				
2	405	722371	A21-50-8016	KEY, CARRYING CASE	
1	404	722801	A21-50-8011	CARRYING CASE, ALUM	
1	403	722439	A21-50-8007	POUCH, VINYL	
2	402	722389	A21-50-8015	VELCRO FASTENER	
	401				

PARTS LIST

CAUTION
SUBJECT TO DAMAGE BY
STATIC ELECTRICITY

BASIC		
DWG NO SUFFIX	DRAWING NO	PART NO
	FIRST USED ON	
APPLICATION		

PROPRIETARY NOTICE

FLUKE 89536

JOHN FLUKE MFG CO INC
P O BOX C9090
EVERETT WA 98206

DO NOT SCALE DRAWING

UNLESS OTHERWISE SPECIFIED
TOLERANCE
DIMENSIONS IN INCHES

DWN D C BARRETT
CHK
PROJ ENGR T L ROSS 8/1/84
MFG ENGR A E LUCAS 7/31/84
FINISH

FINAL ASSEMBLY
(GROUP-04)

PART NO	SIZE	DRAWING NO
716233	D	A21-50-5001

SCALE — SHEET 1 OF 1 REV A

PROPRIETARY

LTR	DESCRIPTION	EFF
-	RELEASE TO PRODUCTION	

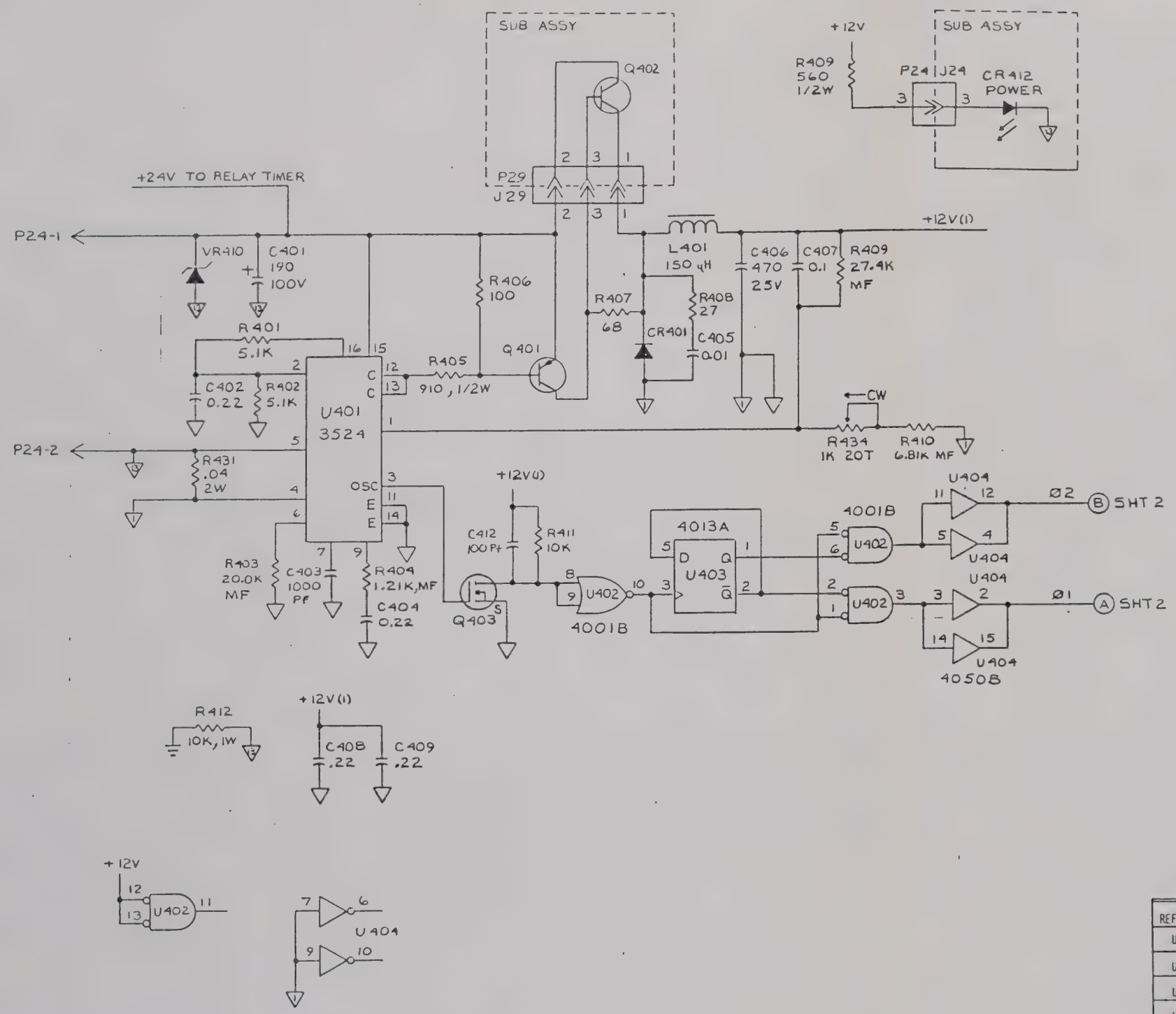

NOTES: UNLESS OTHERWISE SPECIFIED

1. SEE A21-50-1601 FOR REFERENCE DESIGNATOR DRAWING.
2. ALL GRAPHIC SYMBOLS ARE IN ACCORDANCE WITH ANSI Y32.2 & Y32.14.
3. ALL RESISTORS ARE 1/4W, 5%, CARBON FILM. ALL RESISTANCE IS IN OHMS.
4. ALL CAPACITANCE IS IN MICRO-FARADS.
5. REFERENCE DESIGNATOR CHARTS FOR POWER SUPPLY CONNECTIONS ARE IN RESPECTIVE SECTIONS.
6. SEE A21-50-4001 FOR ASSEMBLY DRAWING.

REFERENCE DESIGNATION		
FIRST USED	LAST USED	NOT USED
U401	U404	
R401	R434	R428, R429
Q401	Q419	Q404, Q407
CR410	CR412	CR411
VR402	VR410	
C401	C418	C409, C418
L401	L401	
T1	T4	
S401	S404	

REFERENCE DESIGNATION FOR SWITCHES & CONNECTORS		
FIRST USED	LAST USED	NOT USED
S1	S4[illegible]	S21, S28
P2	P29	P1[illegible]
J2	J29	J1[illegible]

REF DES	+12V (1)	▽
U401	--	4,5,8,10,11,14
U402	12,13,14	7
U403	9,11,14	4,6,7,8,10
U404	1,16	7,8,9

QTY	ITEM	PART NO	DRAWING NO	DESCRIPTION	REF

PARTS LIST

CAUTION
SUBJECT TO DAMAGE BY STATIC ELECTRICITY

BASIC		
DWG NO	DRAWING NO	PART NO
SUFFIX	FIRST USED ON	
APPLICATION		

PROPRIETARY NOTICE

FLUKE 89536

JOHN FLUKE MFG CO INC
P O BOX C9090
EVERETT WA 98204

DO NOT SCALE DRAWING
UNLESS OTHERWISE SPECIFIED
TOLERANCE
DIMENSIONS IN INCHES

DWN B. HANSON
CHK
PROJ ENGR T. ROBB
MFG ENGR A. K. [illegible]
FINISH

SCHEMATIC, MAIN PCB ASSEMBLY (PREREGULATOR)

PART NO | SIZE D | DRAWING NO A21-50-1001

SCALE

PROPRIETARY

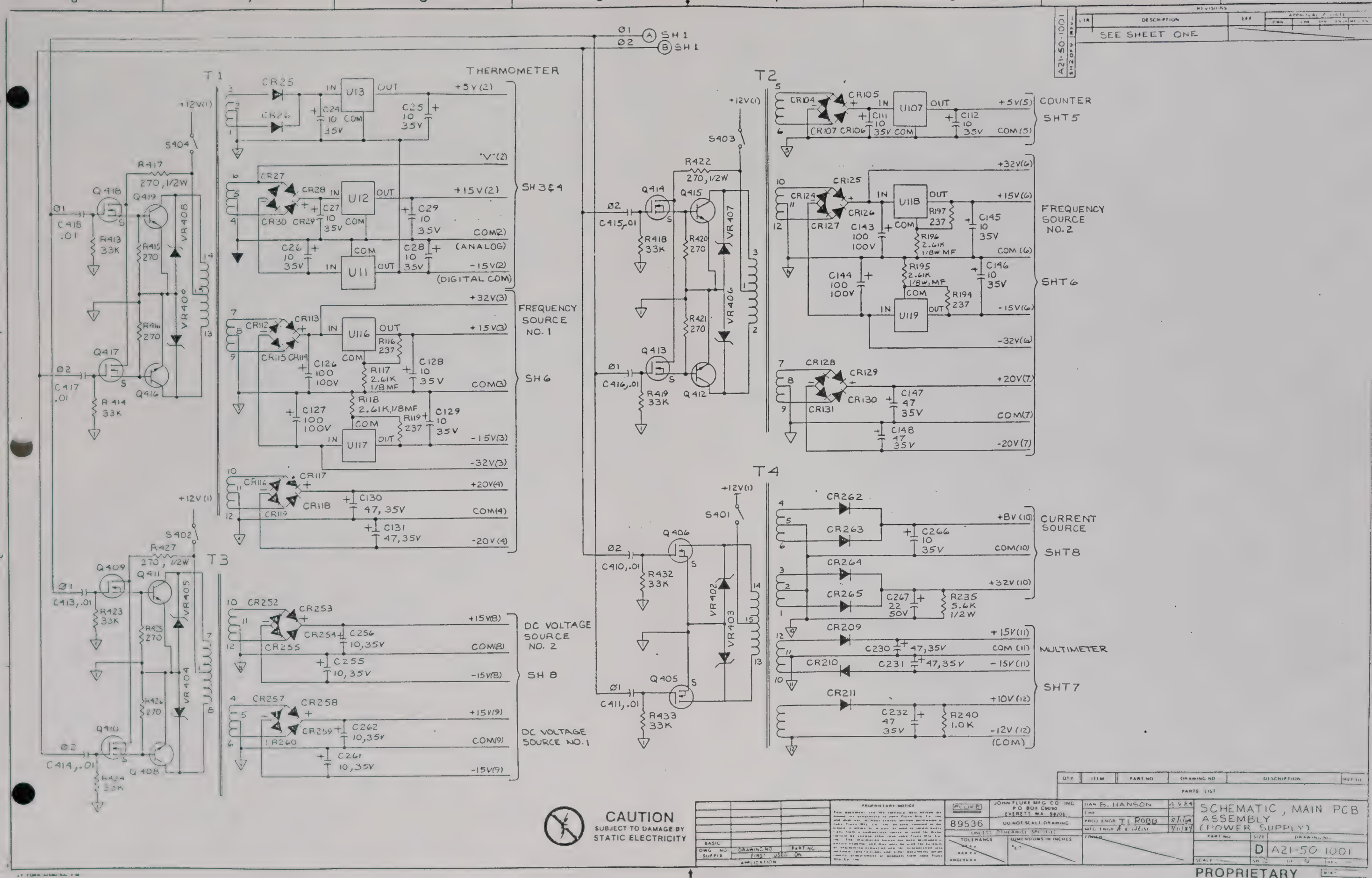

SEE SHEET ONE
A21-50-1001
THERMOMETER
SH 3 & 4
FREQUENCY SOURCE NO. 1
SH 6
DC VOLTAGE SOURCE NO. 2
SH 8
DC VOLTAGE SOURCE NO. 1
COUNTER
SHT 5
FREQUENCY SOURCE NO. 2
SHT 6
CURRENT SOURCE
SHT 8
MULTIMETER
SHT 7
T1
T2
T3
T4
CAUTION
SUBJECT TO DAMAGE BY STATIC ELECTRICITY
JOHN FLUKE MFG CO INC
P O BOX C9090
EVERETT WA 98206
89536
DO NOT SCALE DRAWING
SCHEMATIC, MAIN PCB ASSEMBLY (POWER SUPPLY)
D
A21-50 1001
PROPRIETARY

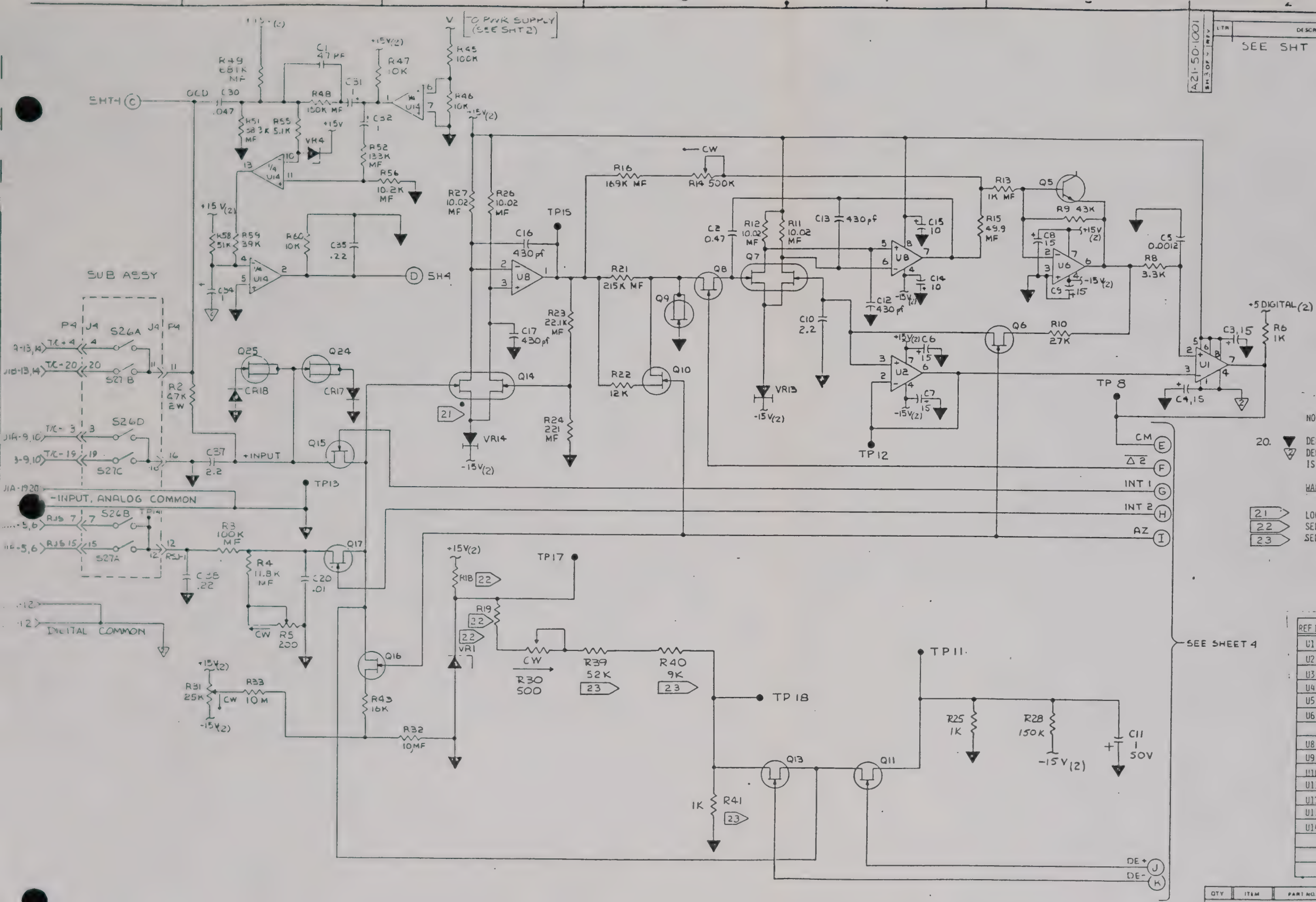

REF DES CHART		
FIRST USED	LAST USED	NOT USED
U1	U21	U5, U7, U9, U10, U15 THRU U19
R2	R83	R7, R17, R20, R29, R34 THRU R38, R53, R54, R61 THRU R64, R72, R73, R74
Q5	Q25	Q12 Q18 THRU Q22
CR15	CR30	CR19, CR21 THRU CR 24
VR1	VR75	VR2, VR3, VR5 THRU VR12, VR15 THRU VR18 VR20 THRU VR74
C1	C41	C18, C19, C21, C22, C33, C39
Z5	Z5	
TP1	TP19	TP13 TP15

NOTES: (CONT.)

20. ▼ DENOTES ANALOG COMMON (0 VOLTS), ▽2 DENOTES DIGITAL COMMON. DIGITAL COMMON IS -15V WITH RESPECT TO ANALOG COMMON.

WARNING: DO NOT CONNECT ▽2 TO ▼, DAMAGE MAY RESULT.

21 LOCATE WITH MARKED GATE IN POSITION SHOWN.
22 SELECTED SET.
23 SELECTED SET.

REF DES	+5 DIG (2)	+15V(2)	▽2	▼
U1		5,6,8	1,4	
U2		7	4	
U3	14		7	
U4	40		20,21	
U5				1
U6		7	4	
U8		8	4	
U9				7,8
U10			4	5,6
U11				
U12				
U13				
U14		3	12	5,7

A21-50-1001 SH 3 OF 4 REV

REVISIONS

LTR	DESCRIPTION	EFF	APPROVAL / DATE
	SEE SHT 1 FOR REVS		

CAUTION
SUBJECT TO DAMAGE BY STATIC ELECTRICITY

PARTS LIST

QTY	ITEM	PART NO.	DRAWING NO	DESCRIPTION	REF DES

PROPRIETARY NOTICE

FLUKE 89536

JOHN FLUKE MFG CO. INC
P.O. BOX 43210
MOUNTLAKE TERRACE WA 98043

DO NOT SCALE DRAWING

UNLESS OTHERWISE SPECIFIED
TOLERANCE
DIMENSIONS IN INCHES

DWN C. FARGESON
CHK MARK SMITH
PROJ ENGR TL ROBB
MFG ENGR A. K. JESS

FINISH —

SCHEMATIC, MAIN PCB ASSEMBLY (THERMOMETER)

PART NO.	SIZE	DRAWING NO
—	D	A21-50-1001

SCALE — SH — OF — REV —

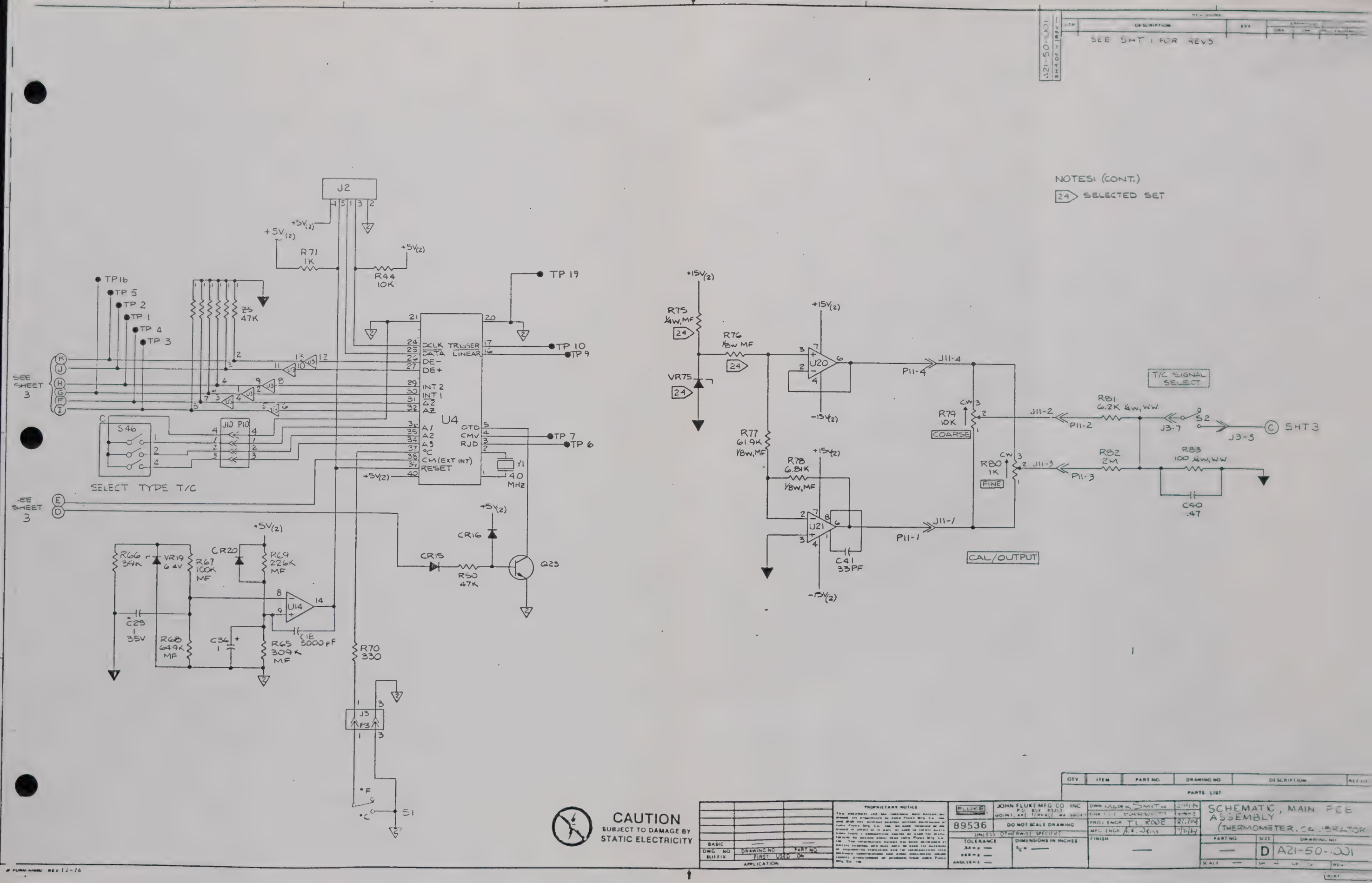

SEE SHT 1 FOR REVS
A21-50-001
NOTES: (CONT.)
24 SELECTED SET
J2
+5V(2)
R71 1K
R44 10K
TP 19
TP16
TP 5
TP 2
TP 1
TP 4
TP 3
Z5 47K
SEE SHEET 3
DCLK
DATA
DE-
DE+
INT 2
INT 1
A2
A1
A3
°C
CM (EXT INT)
RESET
TRIGGER
LINEAR
OTD
CMV
RJD
U4
TP 10
TP 9
TP 7
TP 6
Y1 4.0 MHz
S46
J10 P10
SELECT TYPE T/C
R66 39K
VR19 6.4V
R67 100K MF
CR20
R69 226K MF
U14
C23 1 35V
R68 649K MF
C36 1
R65 309K MF
C18 5000 pF
CR16
CR15
R50 47K
Q23
R70 330
J3 P3
S1
+15V(2)
R75 1/4W, MF
R76 1/8W MF
VR75
U20
-15V(2)
R77 61.9K 1/8W, MF
R78 6.81K 1/8W, MF
U21
C41 33PF
J11-4
P11-4
J11-2
P11-2
J11-3
P11-3
J11-1
P11-1
R79 10K
COARSE
R80 1K
FINE
CAL/OUTPUT
T/C SIGNAL SELECT
R81 6.2K 1/4W, W.W.
R82 2M
R83 100 1/4W, W.W
C40 .47
J3-7
S2
J3-5
SHT 3
CAUTION
SUBJECT TO DAMAGE BY STATIC ELECTRICITY
PROPRIETARY NOTICE
FLUKE
JOHN FLUKE MFG CO., INC
P.O. BOX 43210
MOUNTLAKE TERRACE, WA 98043
89536
DO NOT SCALE DRAWING
UNLESS OTHERWISE SPECIFIED
TOLERANCE
DIMENSIONS IN INCHES
DWN MARK SMITH
PROJ ENGR T.L. ROBE
MFG ENGR A.K. JEIN
FINISH
SCHEMATIC, MAIN PCB ASSEMBLY (THERMOMETER CALIBRATOR)
PART NO.
SIZE
D
DRAWING NO
A21-50-001
SCALE
BASIC
DWG NO SUFFIX
DRAWING NO
PART NO
FIRST USED ON
APPLICATION
QTY
ITEM
PART NO.
DRAWING NO
DESCRIPTION
PARTS LIST

C102 .22 C104 .22 C103 .22 C106 .22 C107 .22 TP 101 +5V (5)

+5V(5) U101 SEL GT OSC OUT LT OSC IN RT C109 5-50pf C108 8pf Y101 TP102

U104 C U104 EN Q5 CO U102 R Q6 U105 B U104 E

+5V (5) R107 10K U104 A U104 B

U105 A LATCH U104 F LATCH

U104 D POR

U105 D RESET U103 RESET

+5V(5) 19 +5V(5) LATCH POR RESET BP BP GATE FIN GND (5) J2

U103 R108 1K

SHIELD C114 .05 C115 .05 R101 100K 1W R102 10M C101 12pF CR101 CR102 Q101 +5V(5) R103 220 C102 47 35V R104 680 R105 270 C113 10PF R106 5.6K U103 A U103 B U103 C U103 D U105 C

J3 P3 SHT 6 SHT 6 SHT 6 S5E S5F S6D P14 EXT IN 1 S6B S6E S7C P15 EXT IN 2 S7A S7E S7F S8F

P3 J3 72 72 70 70 J7 P7 4 4 2 2

S31B INT HI M SHT 6,7 INT MULIT COM P SHT 6,7,8 S31D

J30 P30 R114

CAUTION SUBJECT TO DAMAGE BY STATIC ELECTRICITY

A21-50-1001 REV

LTR	DESCRIPTION	ECO	APPROVED	DATE

SEE SHT 1 FOR REVS

NOTES: UNLESS OTHERWISE SPECIFIED

14 PIN NUMBERS SHOWN REFER TO CONNECTIONS BETWEEN A1-J4 AND A5-P4 (TYP)

COUNTER CONTROL TIMING

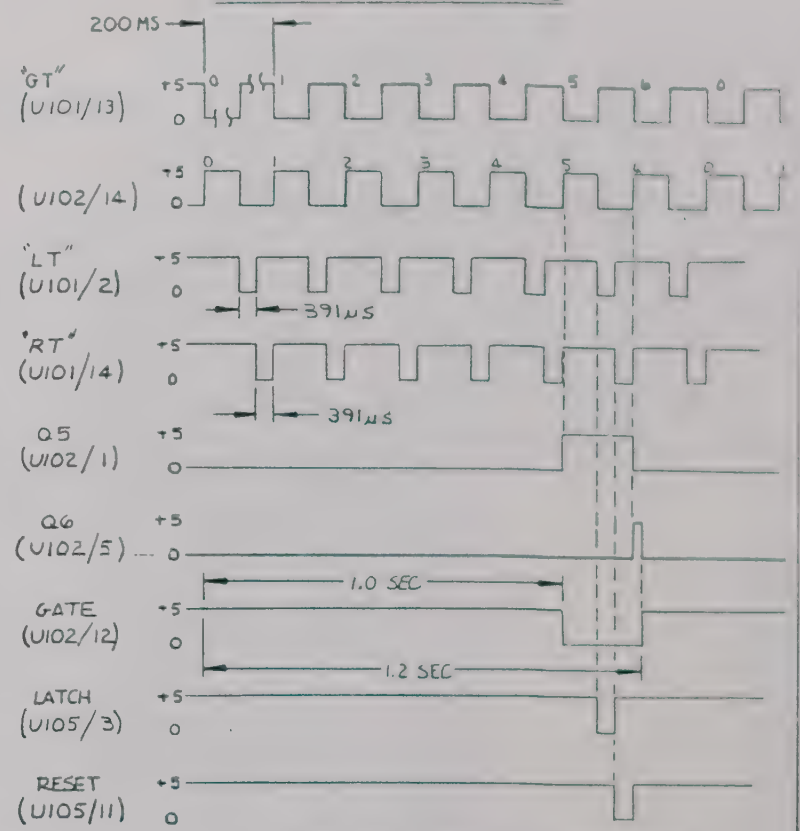

REF DES	+5V	GND
U101	10,11	4
U102	16	8,13
U103	14	7
U104	14	7
U105	14	7

REF DES CHART

FIRST USED	LAST USED	NOT USED
U101	U119	U106
R101	R197	R120, 121
Q101	Q109	
CR101	CR131	CR103
VR110	VR123	VR112 THRU VR121
C101	C154	C110
TP101	TP102	
L101	L102	

QTY	ITEM	PART NO	DRAWING NO	DESCRIPTION	REF DES

PARTS LIST

PROPRIETARY NOTICE

BASIC DWG NO / BUFFIR | DRAWING NO | PART NO | FIRST USED ON | APPLICATION

FLUKE 89536 JOHN FLUKE MFG CO., INC P.O. BOX 43210 MOUNTLAKE TERRACE WA 98043

DO NOT SCALE DRAWING UNLESS OTHERWISE SPECIFIED TOLERANCE .XX ±.01 .XXX ±.005 ANGLES ±1° DIMENSIONS IN INCHES

DRN L. JACKSON 11-1-76 CHK J. C. BARNETT 11-19-76 ENGR T. L. KOBE 11/24 MFG ENGR [illegible] 11/29/76 FINISH

SCHEMATIC, MAIN (AUDIO FREQUENCY)

PART NO [illegible] SIZE D DRAWING NO A21-50-1001 SCALE — SHT OF REV

PURCHASED REV 12-76

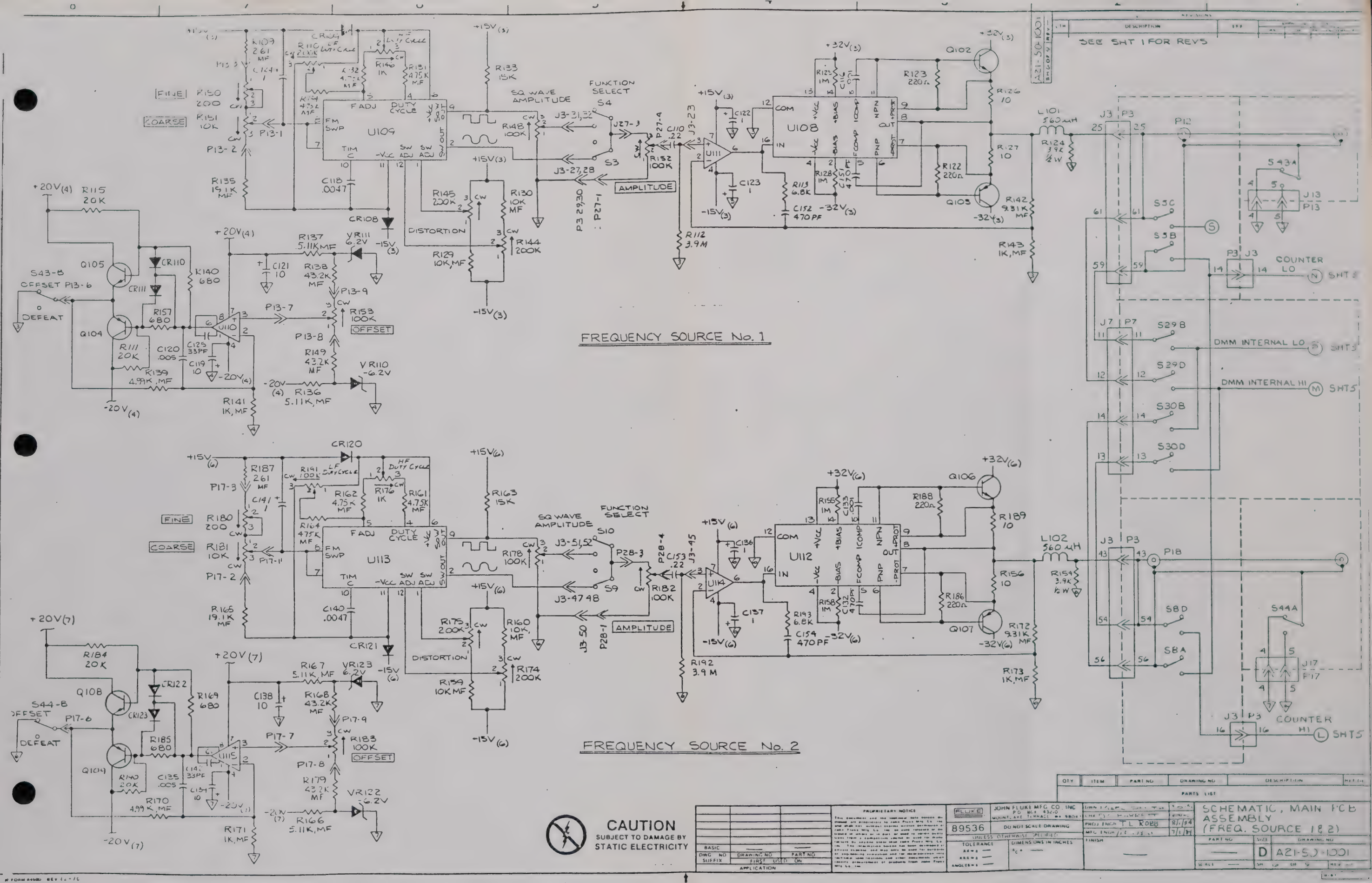

CAUTION
SUBJECT TO DAMAGE BY STATIC ELECTRICITY

PROPRIETARY NOTICE

FLUKE 89536

JOHN FLUKE MFG. CO. INC.
P.O. BOX 43210
MOUNTLAKE TERRACE, WA 98043

DO NOT SCALE DRAWING

UNLESS OTHERWISE SPECIFIED
TOLERANCE
DIMENSIONS IN INCHES

PROJ ENGR T L ROBB 8/1/84
MFG ENGR 7/1/84

FINISH

SCHEMATIC, MAIN PCB ASSEMBLY (FREQ. SOURCE 1 & 2)

PART NO — SIZE D — DRAWING NO A21-50-1001

SCALE — SH 16 OF 5

PARTS LIST

QTY	ITEM	PART NO	DRAWING NO	DESCRIPTION	REF DES

BASIC — DWG NO — SUFFIX — DRAWING NO — PART NO — FIRST USED ON — APPLICATION

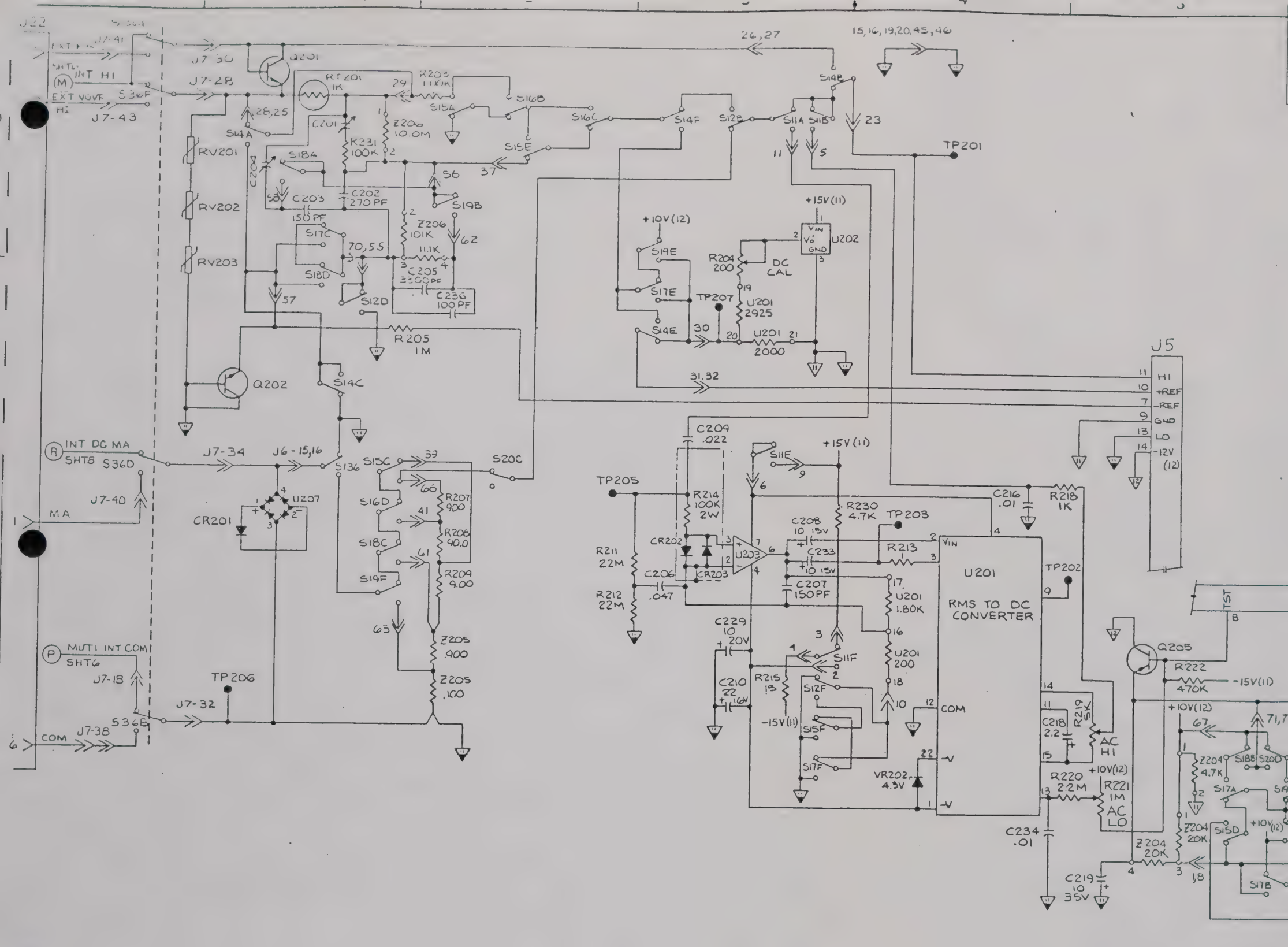

NOTES: (CONT.)

40. NUMBERS ADJACENT TO ⟫ INDICATE PIN NUMBERS ON J6/P6.

41. SWITCH IDENTIFICATION:

S11 - AC/DC	S17 - 20
S12 - VOLTS	S18 - 200
S13 - mA	S19 - 2K
S14 - KΩ	S20 - 20MΩ/10A
S15 - .2	S36 - MULTIMETER (EXTERNAL) INPUT
S16 - 2	

REF DES CHART

FIRST USED	LAST USED	NOT USED
U201	U256	U204 U205 U206 U208 THRU U250
R201	R292	R206 R210, R216, R217, R224 THRU R229, R232, R233, R234, R236 THRU R239, R241 THRU R247
Q201	Q256	Q203, Q204, Q206 THRU Q250
CR201	CR265	CR204 THRU CR208, CR212 THRU CR250
VR202	VR202	
C201	C269	C213, C214, C215, C217, C220 THRU C228, C235, C235, C237 THRU C247, C250
TP201	TP207	
Z204	Z206	
L250	L252	

A21-50-1001

SEE SHT 1 FOR REVS

QTY	ITEM	PART NO	DRAWING NO	DESCRIPTION	REF DES

PARTS LIST

CAUTION
SUBJECT TO DAMAGE BY STATIC ELECTRICITY

PROPRIETARY NOTICE

FLUKE 89536

JOHN FLUKE MFG CO. INC
P.O. BOX 43210
MOUNTLAKE TERRACE WA 98043

DO NOT SCALE DRAWING

UNLESS OTHERWISE SPECIFIED

TOLERANCE
DIMENSIONS IN INCHES

DWN MARK SMITH
CHK D.C. BARRETT
PROJ ENGR T.L. ROBB
MFG ENGR A.E. WISE
FINISH

SCHEMATIC, MAIN PCB ASSEMBLY (MULTIMETER)

PART NO | SIZE D | DRAWING NO A21-50-1001

SCALE | SH 1 OF 6 | REV

BASIC | DWG NO | DRAWING NO | PART NO
SUFFIX | FIRST USED ON
APPLICATION

REV 12-76

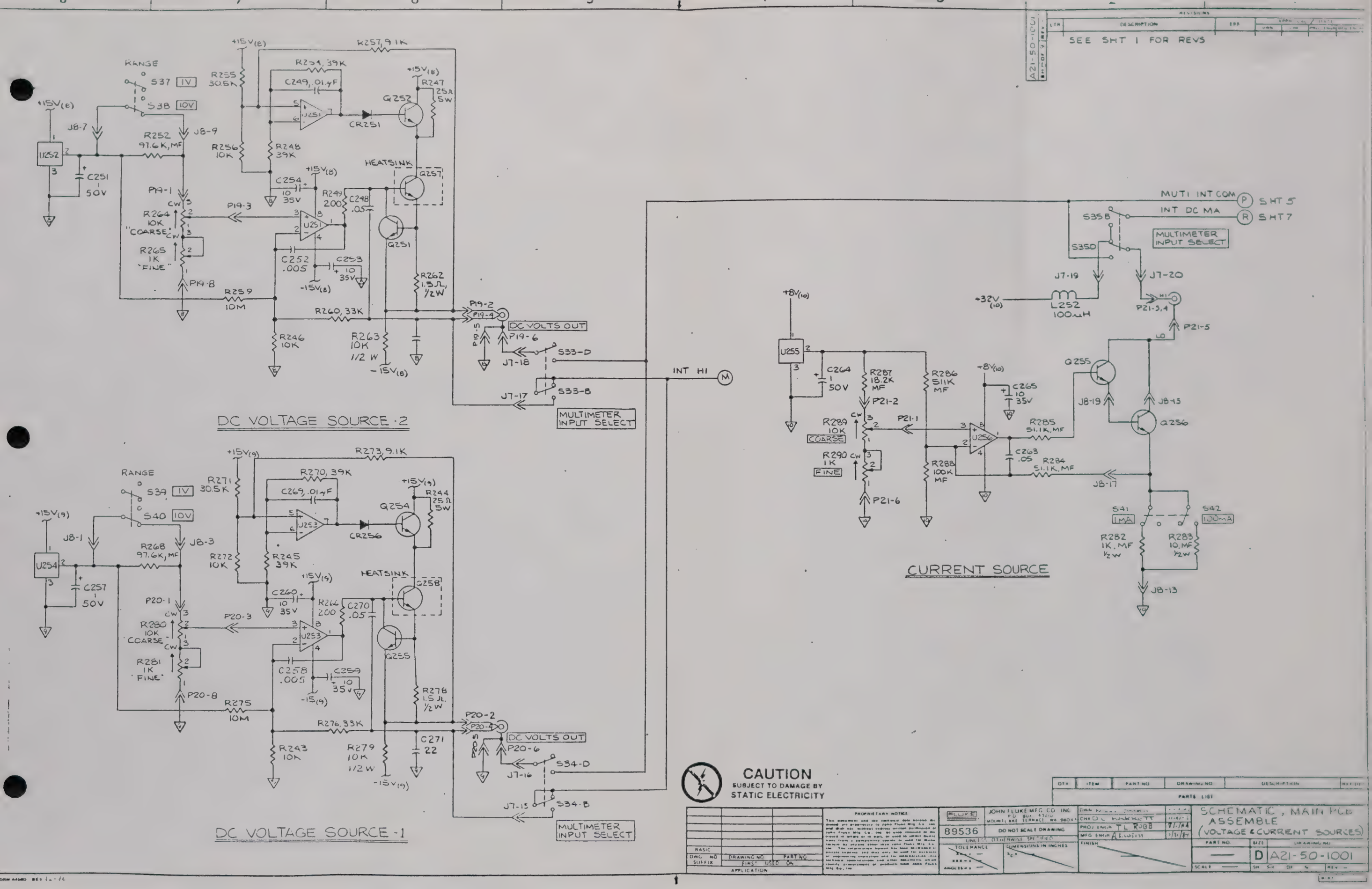

SEE SHT 1 FOR REVS
A21-50-1001
DC VOLTAGE SOURCE-2
RANGE
S37 1V
S38 10V
U252
R252 97.6K, MF
C251 50V
R255 30.5K
R256 10K
R257, 9.1K
R254, 39K
C249, .01μF
U251
CR251
Q252
R247 25Ω 5W
R248 39K
HEATSINK
Q257
C254 10 35V
R249 200
C248 .05
Q251
P19-1
P19-3
R264 10K "COARSE"
R265 1K "FINE"
P19-8
C252 .005
C253 10 35V
-15V(8)
R262 1.5Ω, 1/2W
R259 10M
R260, 33K
R246 10K
R263 10K 1/2 W
-15V(8)
P19-2
P19-4
DC VOLTS OUT
P19-6
J7-18
S33-D
J7-17
S33-B
MULTIMETER INPUT SELECT
INT HI
DC VOLTAGE SOURCE-1
RANGE
S39 1V
S40 10V
U254
R268 97.6K, MF
C257 50V
R271 30.5K
R272 10K
R273, 9.1K
R270, 39K
C269, .01μF
U253
CR256
Q254
R244 25Ω 5W
R245 39K
HEATSINK
Q258
C260 10 35V
R266 200
C270 .05
Q255
P20-1
P20-3
R280 10K COARSE
R281 1K "FINE"
P20-8
C258 .005
C259 10 35V
-15(9)
R278 1.5Ω, 1/2W
R275 10M
R276, 33K
R243 10K
R279 10K 1/2 W
C271 22
-15V(9)
P20-2
P20-4
DC VOLTS OUT
P20-6
J7-16
S34-D
J7-15
S34-B
MULTIMETER INPUT SELECT
CURRENT SOURCE
U255
C264 1 50V
R287 18.2K MF
R286 511K MF
R289 10K COARSE
R290 1K FINE
P21-1
P21-2
P21-6
U256
C265 10 35V
R285 51.1K, MF
C263 .05
R284 51.1K, MF
R288 100K MF
J8-17
Q255
Q256
J8-19
J8-15
S41 1MA
S42 100MA
R282 1K, MF 1/2W
R283 10, MF 1/2W
J8-13
MUTI INT COM
INT DC MA
S35B
S35D
MULTIMETER INPUT SELECT
J7-19
J7-20
L252 100μH
P21-3,4
P21-5
CAUTION
SUBJECT TO DAMAGE BY STATIC ELECTRICITY
PARTS LIST
JOHN FLUKE MFG CO INC
89536
DO NOT SCALE DRAWING
UNLESS OTHERWISE SPECIFIED
SCHEMATIC, MAIN PCB ASSEMBLY (VOLTAGE & CURRENT SOURCES)
A21-50-1001

REVISIONS			
LTR	DESCRIPTION	EFF	APPROVAL / DATE
\	SEE SHET ONE		

A21-50-1001 SH 9 OF 9 REV

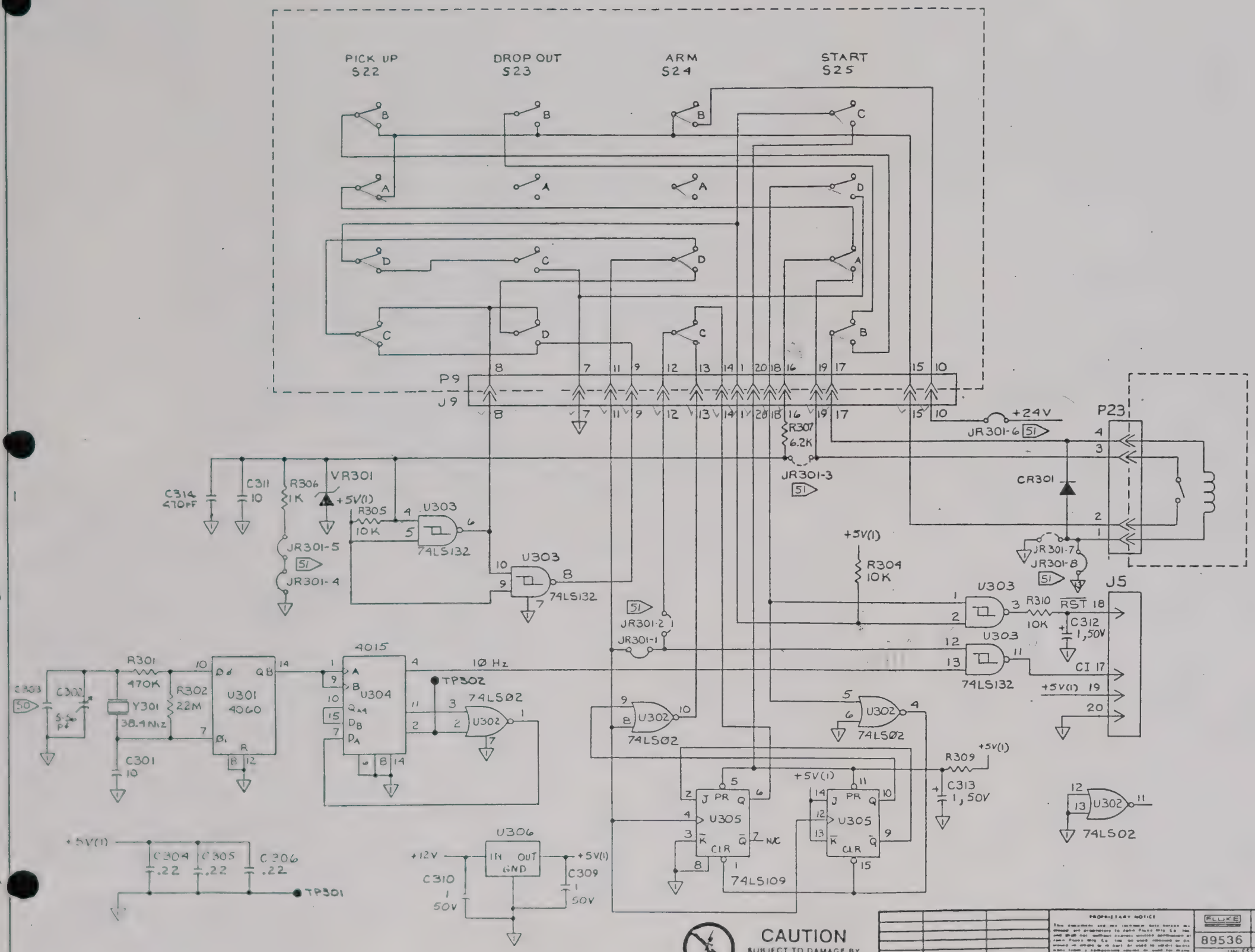

NOTES: (CONTINUED)

50. SELECTED PART

51. A21-50 TIMER CONFIGURATION IS DETERMINED IN THE FACTORY AT ASSEMBLY. THE RELAY TIMER REQUIRES POSITIONS 1,4,5,6 & 8 OF JR301 TO BE SHORTED AND POSITIONS 2,3, & 7 TO BE OPENED.

25 PTS LOGIC TIMER REQUIRES 2,3,7 be shorted, 1,4,6,8 be open.

REF DES	+ 5V	▽
U301	16	8,12
U302	14	7,12,13
U303	14	7
U304	16	6,8,14
U305	12,13,14,16	3,8

REFERENCE DESIGNATION		
FIRST USED	LAST USED	NOT USED
C301	C311	
R301	R309	302, 303
CR301	CR301	
U301	U306	
Y301	Y301	
VR301	VR301	

CAUTION
SUBJECT TO DAMAGE BY STATIC ELECTRICITY

QTY	ITEM	PART NO	DRAWING NO	DESCRIPTION	REF DES

PARTS LIST

PROPRIETARY NOTICE

FLUKE 89536 — JOHN FLUKE MFG CO. INC, P.O. BOX C9090, EVERETT WA 98206 — DO NOT SCALE DRAWING — UNLESS OTHERWISE SPECIFIED — TOLERANCE — DIMENSIONS IN INCHES

DWN R. HANSON 4-10-84
CHK
PROJ ENGR T. L. ROBB 8/1/84
MFG ENGR N. C. WEISS 7/31/84
FINISH

SCHEMATIC, MAIN PCB ASSEMBLY (RELAY TIMER)

PART NO — SIZE D — DRAWING NO A21-50-1001

SCALE — SH 9 OF 9 — REV

PROPRIETARY

LTR	DESCRIPTION	EFF	DATE	PROJ ENGR	MFG ENGR
A	C1 WAS 100pF. R2 WAS 150K.				

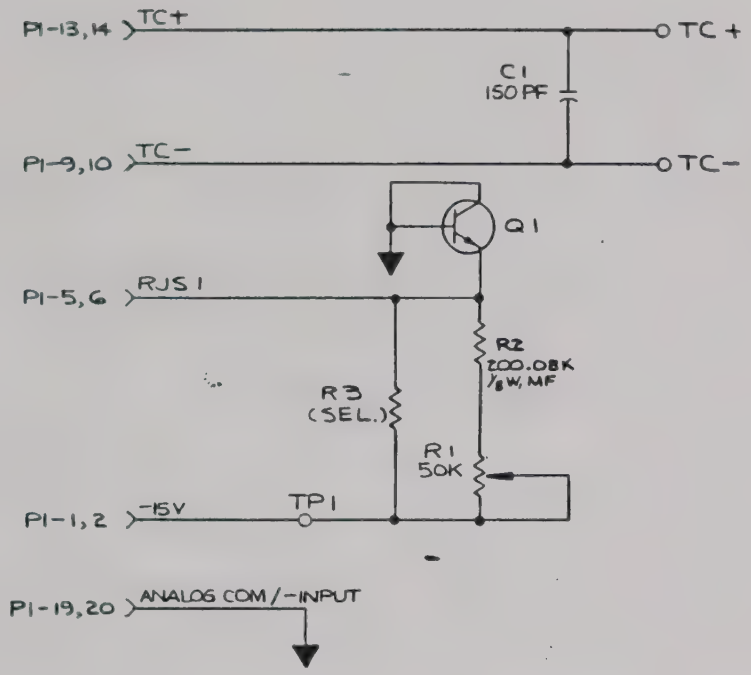

NOTES: UNLESS OTHERWISE SPECIFIED

1. UNLESS OTHERWISE SPECIFIED ALL RESISTANCES ARE IN OHMS AND ALL CAPACITANCES ARE IN MICRO-FARADS.
2. ALL RESISTORS ARE IN 1/4W, 5% UNLESS OTHERWISE NOTED.
3. ALL GRAPHIC SYMBOLS ARE IN ACCORDANCE WITH ANSI Y32.2 AND Y32.14.
4. ▼ DENOTES ANALOG COMMON.
5. FOR ASSY DWG SEE A21-44-4002

A21-44-1002
SH 1 OF 1 REV A

QTY	ITEM	PART NO.	DRAWING NO	DESCRIPTION	REF DES

PARTS LIST

PROPRIETARY NOTICE
This document and the technical data herein disclosed are proprietary to John Fluke Mfg. Co., Inc. and shall not without express written permission of John Fluke Mfg. Co. Inc. be used, released or disclosed in whole or in part, or used to obtain manufacturing data from a competitive source or used for manufacturing by anyone other than John Fluke Mfg. Co. Inc. The information herein has been developed at private expense and may only be used for purposes of engineering evaluation and for incorporation into technical specifications and other documents which identify procurement of products from John Fluke Mfg. Co., Inc.

BASIC		
DWG NO SUFFIX	DRAWING NO	PART NO
APPLICATION	FIRST USED ON	

FLUKE
JOHN FLUKE MFG CO., INC
P O BOX 43210
MOUNTLAKE TERRACE, WA 98043

89536 DO NOT SCALE DRAWING

UNLESS OTHERWISE SPECIFIED
TOLERANCE .XX = ± .XXX = ± ANGLES = ±
DIMENSIONS IN INCHES

DWN	K. FUNG LAU	9/22/80
CHK	MARK SMITH	1/20/81
PROJ ENGR		
MFG ENGR		
FINISH		

SCHEMATIC, THERMOCOUPLE INPUT

PART NO	SIZE	DRAWING NO
	C	A21-44-1002
SCALE	SH 1 OF 1	REV A

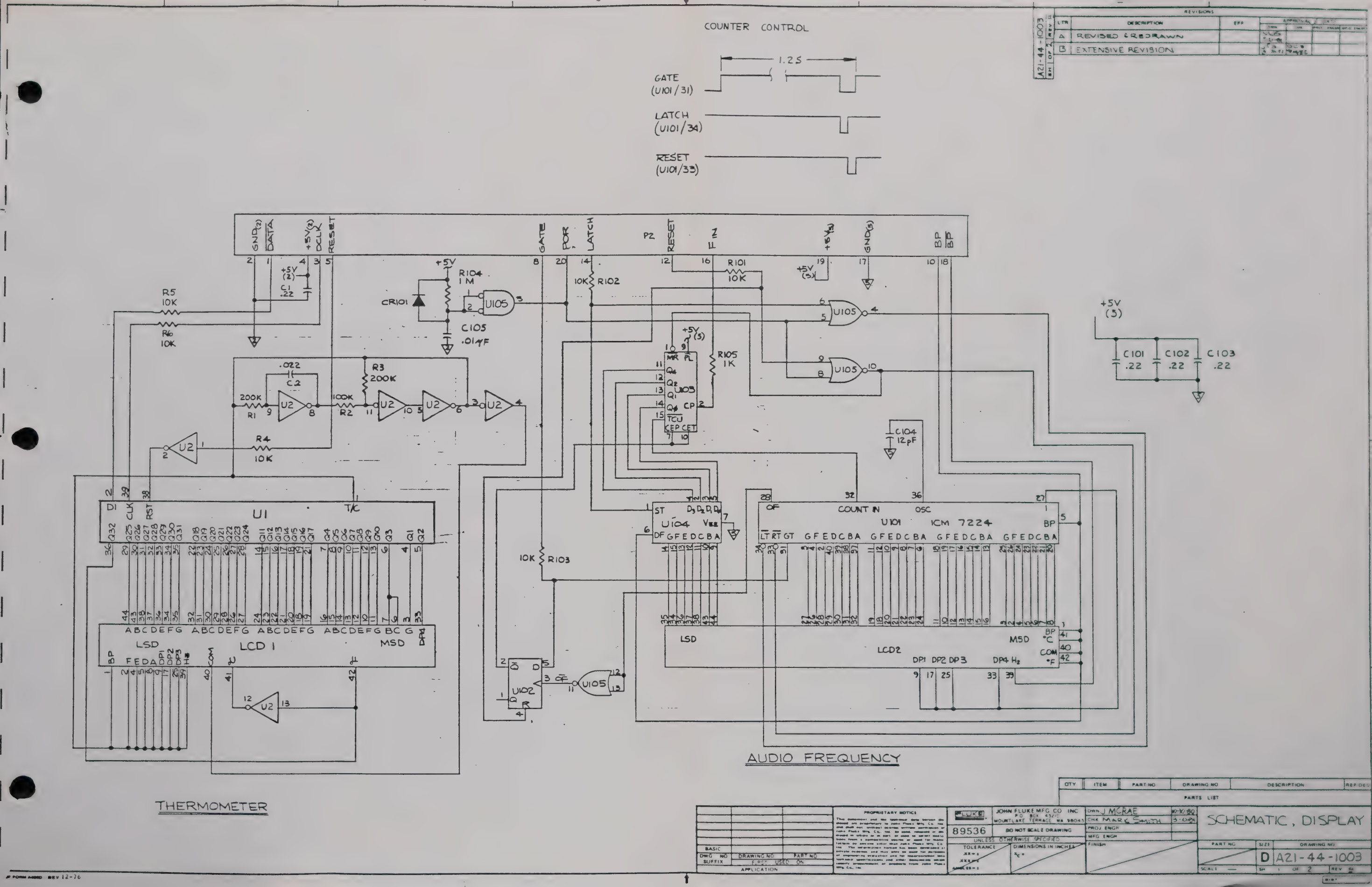

REVISIONS			
LTR	DESCRIPTION	EFF	APPROVAL
A	REVISED & REDRAWN		
B	EXTENSIVE REVISION		

A21-44-1003 SH 1 OF 2 REV B

QTY	ITEM	PART NO	DRAWING NO	DESCRIPTION	REF DES

PARTS LIST

PROPRIETARY NOTICE

FLUKE 89536

JOHN FLUKE MFG CO INC
P.O. BOX 43210
MOUNTLAKE TERRACE WA 98043

DO NOT SCALE DRAWING

UNLESS OTHERWISE SPECIFIED
TOLERANCE
DIMENSIONS IN INCHES

DWN J MCRAE 10-30-80
CHK MARK SMITH 3-10-81
PROJ ENGR
MFG ENGR
FINISH

SCHEMATIC, DISPLAY

PART NO | SIZE D | DRAWING NO A21-44-1003

SCALE — | SH 1 OF 2 | REV B

BASIC
DWG NO SUFFIX | DRAWING NO | PART NO
FIRST USED ON
APPLICATION

FORM A4000 REV 12-76

A21-44-1003 SH 2 OF 2 REV B

LTR	DESCRIPTION	ECO	APPROVAL	DATE

REVISIONS

SEE SHEET 1

	I C	+5(2)	+5V(3)	+VDD	+5(1)	▽(2)	▽(5)	▽(11)	▽(12)	-VSS	▽(1)
THERM	U 1	40				20					
	U 2	14				7					
AUDIO FREQ.	U101		1				35				
	U102		9,14				6,7,8 10,11				
	U103		3,4,5,6 9,16				8				
	U104		16				7,8				
	U105		14				7				
MULTI-METER	U201			1					30	26	
	U202			14				5,6			
RELAY TIMER	U301				1						29,35
	U302				9,14						6,7,8
	U303				1,5,13,4						7

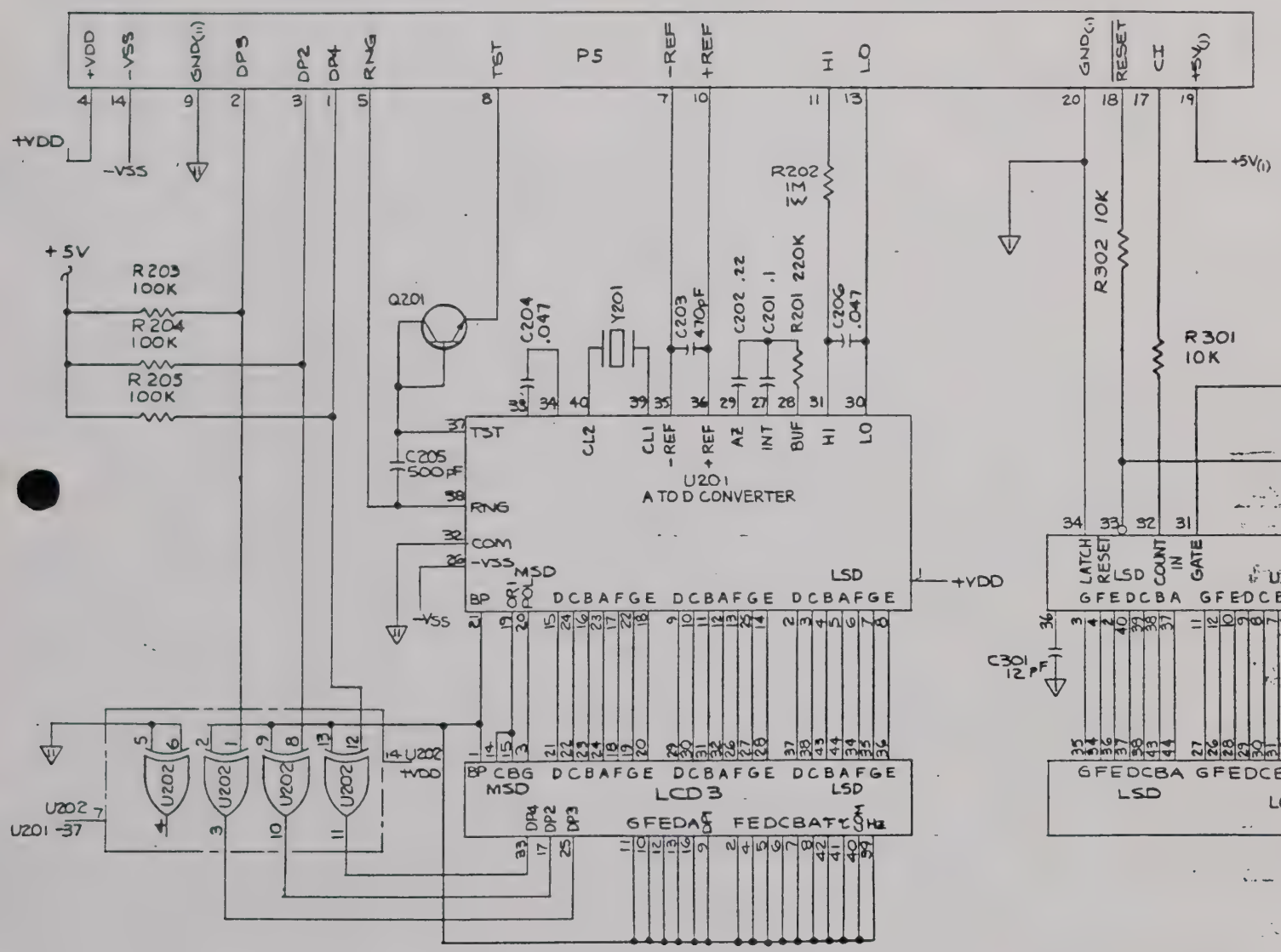

MULTIMETER

RELAY TIMER

QTY	ITEM	PART NO	DRAWING NO	DESCRIPTION	REF DES

PARTS LIST

PROPRIETARY NOTICE

This document and the information data herein disclosed are proprietary to John Fluke Mfg. Co., Inc. and shall not, without express written permission of John Fluke Mfg. Co., Inc. be used, reproduced or disclosed to others in part or whole except to extent needed by John Fluke Mfg. Co., Inc. employees or used for maintenance by persons other than John Fluke Mfg. Co., Inc. The information herein has been developed at private expense and may only be used for the purposes of engineering evaluation and for maintenance and operation specifications and other documents with identity permission of persons by John Fluke Mfg. Co., Inc.

BASIC DWG NO SUFFIX	DRAWING NO	PART NO
APPLICATION	FIRST USED ON	

FLUKE

JOHN FLUKE MFG CO. INC
P.O. BOX 43210
MOUNTLAKE TERRACE, WA 98043

89536

DO NOT SCALE DRAWING

UNLESS OTHERWISE SPECIFIED
TOLERANCE .XX = ± .XXX = ± ANGLES = ±
DIMENSIONS IN INCHES
FINISH

	NAME	DATE
DWN	J MCRAE	6-1-81
CHK	MARK SMITH	6-12-81
PROJ ENGR		
MFG ENGR		

SCHEMATIC, DISPLAY

PART NO	SIZE	DRAWING NO
	D	A21-44-1003
SCALE —	SH 2 OF 2	REV B

FORM A6888 REV 12-76

RECEIVED
JUL 2 7 1984
FLUKE, DALLAS

2590FTS
Field Test Set

Operator Manual

©1984, John Fluke Mfg. Co., Inc.

TABLE OF CONTENTS

SECTION	TITLE	PAGE
-	List of Illustrations	ii
1	INTRODUCTION AND SPECIFICATIONS	1-1
	1-1. INTRODUCTION	1-1
	1-5. Temperature Section	1-1
	1-10. Frequency Section	1-1
	1-13. Multimeter Section	1-2
	1-16. DC Voltage/Current Section	1-2
	1-19. Logic Timer Section	1-2
	1-21. Power Supply	1-3
	1-23. SPECIFICATIONS	1-3
	1-24. Thermometer	1-4
	1-24. T/C Calibrator	1-6
	1-24. Frequency Counter	1-6
	1-24. Frequency Sources	1-6
	1-24. Multimeter	1-7
	1-24. DC Voltage Sources	1-11
	1-24. Current Source	1-11
	1-24. Logic Timer	1-11
	1-24. General	1-12
	1-24. Environmental	1-12
2	OPERATING INSTRUCTIONS	2-1
	2-1. INTRODUCTION	2-1
	2-5. SHIPPING INFORMATION	2-2
	2-8. OPERATING NOTES	2-3
	2-9. Multimeter Section	2-3
	2-50. Temperature Section	2-10
	2-71. Frequency Section	2-13
	2-93. DC Voltage Source	2-15
	2-98. Current Source	2-15
	2-101. Logic Timer	2-16
	2-112. Making Power Input Connections / Fuse	2-20

LIST OF ILLUSTRATIONS

FIGURE	TITLE	PAGE
2-1	Logic Timer Input Waveform.....	2-17
2-2	Logic Timer Operating Modes.....	2-17
2-3	Logic Timer Connector.....	2-19
2-4	Power Input Connection.....	2-20

SECTION 1
Introduction and Specifications

1-1. INTRODUCTION

1-2. The 2590FTS is a portable, integrated test set designed specifically for field testing and troubleshooting of turbine electrical and control systems. It consists of a digital thermometer, a thermocouple indicator calibration source, a digital frequency counter, two function generators, two dc voltage sources, a dc current source, a digital multimeter, and a logic timer. The entire package is housed in a rugged aluminum suitcase and operates from a single dc power source of between 20 and 34 volts.

1-3. All the functions can operate simultaneously without switching hookup leads thus significantly reducing the number of leads necessary and time required to perform maintenance tasks.

1-4. The 2590FTS test set can be used to simulate engine sensory inputs to a turbine control system. The 2590FTS test set then can start, operate, and shut down the control system in a static calibration mode or perform a verification function in an engine operational mode.

1-5. TEMPERATURE SECTION

1-6. The thermometer section of the 2590FTS is a microprocessor based thermocouple indicator capable of precise temperature measurement in either ^{o}C or ^{o}F.

1-7. Eight switch selectable linearization programs provide a total measurement range of $-252^{o}C$ to $2471^{o}C$. Resolution is 0.1 degree below 2000° and 1 degree at 2000° and above. (Refer to Table 1-1 for range and accuracy information for each thermocouple type)

1-8. Electronic cold junction compensation is provided at each of two isolated thermocouple inputs, eliminating the need for external ice point reference baths.

1-9. The thermocouple calibration source simulates any of the eight thermocouple types available on the 2590FTS thermometer section. This section operates together with the thermometer to provide a convenient means of accurately calibrating external indicators.

1-10. FREQUENCY SECTION

1-11. The frequency counter section accurately measures sine or square wave inputs over a frequency range of 25 Hz to 100 kHz with 1 Hz resolution. This section also features adjustable input sensitivity and automatic frequency overrange indication.

1-12. The two frequency sources are identical and provide sine and square wave functions over a frequency range of 25 Hz to 15 kHz. Output amplitude is adjustable from 0 to 20 V rms into a maximum load of 600 ohms, with outputs protected against accidental overloads or short circuiting. An adjustable dc offset of 0 to + 18 volts is also provided.

1-13. MULTIMETER SECTION

1-14. This section of the 2590FTS is a 3 1/2 digit multimeter capable of measuring dc to 1000 volts and 2000 mA, true rms ac to 750V and 2000 mA, resistance to 20 Mohm, and conductance to 2 m siemens.

1-15. Multimeter input select switches are also provided allowing the operator to select any of the internal sources, either of two external frequency inputs, or any external voltage, current, or resistance.

1-16. DC VOLTAGE/CURRENT SECTION

1-17. The two voltage sources are identical and provide 0-10V dc on two ranges. Maximum load current is 400 mA, with output protected against accidental overloads or short circuiting. Source impedance to the output connector is less than .04 ohm.

1-18. The current source provides 0 to 100 mA on two ranges. Maximum compliance voltage is +28V dc.

1-19. TIMER SECTION

1-20. The logic timer section of the 2590FTS has three operating modes: Stopwatch, pulse, and cycle. The pulse mode times the duration of a single event such as the time a relay remains closed. The cycle mode times from one event to another, as from one momentary contact closure to another. Either mode permits timing relay contacts or

positive and negative TTL levels. The logic timer is capable of measuring event times up to 1999.9 seconds.

1-21. POWER SUPPLY

1-22. Power input conditioning is provided by a single switching mode preregulator. This section supplies a regulated 12 volts dc to each of four driven inverters. The four inverters provide a total of 8 isolated supplies to the various functional subsections.

1-23. SPECIFICATIONS

1-24. Specifications for the 2590FTS are shown in Table 1-1.

1-25. MANUALS

1-26. The 2590FTS has two manuals to support it: the Operator Manual and the Service Manual. The Operator manual is included with the 2590FTS. The Service Manual is an available accessory. The Service Manual covers General Maintenance, Calibration Procedures, Theory of Operation, Schematics and Parts Lists.

Table 1-1. 2590FTS Specifications

THERMOMETER

DISPLAY	^{o}F or ^{o}C, switch selectable, seven segment liquid crystal.
RESOLUTION	0.1^{o} below 2000° F or C, 1° above 2000° F or C, autoranging.
MEASUREMENT METHOD	Dual slope integration, under microcomputer control. 100 msec integration period, three readings per second.
LINEARIZATION TECHNIQUE	Computer algorithm, 4th order curve fit. Eight switch selectable linearizations: J,K,T,E,R,S,B,C.

NOTE

"C" is not an ISA/ANSI thermocouple designation. C is used for convenience to represent Tungsten -5% Rhenium versus Tungsten- 26% Rhenium alloy.

TEMPERATURE COEFFICIENT	< 15 ppm/^{o}C from 25 ^{o}C.
STABILITY	< 175 ppm in 90 days, 200 ppm/year.
MAX. COMMON MODE VOLTAGE	350V dc or 250V ac rms.
ZERO DRIFT	None, automatic zero correction.
INPUT CONNECTION	2 wire, isolated, on screw terminal isothermal block. Two switch selectable inputs.
INPUT IMPEDANCE	100 Mohm at dc.
MAX SOURCE IMPEDANCE	2 kilohm.
OVERRANGE INDICATION	Positive or negative full scale display (+ O.L), depending upon polarity of overrange input.
OPEN CIRCUIT DETECTION	A source impedance of 2 kilohm or more causes a display of "O.C".
ACCURACY	See adjacent table "Thermometer Accuracy Specifications".

Table 1-1. 2590FTS Specification (continued)

THERMOCOUPLES		MAXIMUM ERROR *					
		± DEGREES C			± DEGREES F		
TYPE	APPLICABLE PORTION OF TEMP. RANGE, oC	AT CAL	90 DAYS 20oC to 30oC	1 YR 15oC to 35oC	AT CAL	90 DAYS 68oF to 86oF	1 YR 59oF to 95oF
J	-128 to 0 0 to 900	0.18 0.18	0.19 0.31	0.21 0.36	0.20 0.20	0.20 0.47	0.26 0.58
K	-132 to 0 0 to 1350	0.18 0.18	0.19 0.39	0.21 0.47	0.30 0.30	0.33 0.72	0.37 0.87
T	-243 to 0 0 to 400	0.18 0.18	0.20 0.22	0.22 0.25	0.30 0.30	0.35 0.41	0.39 0.46
E	-252 to 0 0 to 1000	0.18 0.18	0.20 0.33	0.22 0.39	0.30 0.30	0.35 0.61	0.40 0.72
R	0 - 1708	0.31	0.59	0.70	0.47	1.01	1.20
S	0 - 1685	0.22	0.50	0.60	0.38	0.92	1.10
B	420 - 1815	0.21	0.52	0.62	0.37	0.95	1.15
C	0 - 2471	0.18	0.60	0.75	0.30	1.11	1.37

* FOR READINGS ABOVE 1999.9 degree C or degree F ADD ± .5 degrees ROUNDOFF ERROR. ACCURACY STATEMENT DOES NOT INCLUDE THERMOCOUPLE ERRORS

THERMOMETER ACCURACY SPECIFICATIONS

Table 1-1. 2590FTS Specifications (continued)

CALIBRATOR

COMPATIBLE TERMOCOUPLE TYPES...	J,K,T,E,R,S,B,C.
OUTPUT IMPEDANCE.....	100 ohm.
RANGE.....	-10 to +90 mV dc, 25 °C.
TEMPERATURE COEFFICIENT.....	< 20 ppm/°C from 25 °C.

FREQUENCY COUNTER

MEASUREMENT RANGE.....	25 Hz to 100 kHz
DISPLAY.....	5-digit liquid crystal with 'Hz'
ACCURACY.....	+ (0.01% + 1 count) 0 - 50 °C
TIMEBASE STABILITY.....	< 10 ppm/year
GATE TIME.....	1 sec.
DISPLAY UPDATE TIME.....	1.2 sec.
SENSITIVITY.....	adjustable 75 mV rms -full scale , 25 Hz to 100 kHz
MAXIMUM INPUT WITHOUT DAMAGE...	500V dc or peak ac
INPUT IMPEDANCE.....	10 Mohm for inputs -1 to +1 volt 100 Kohm for inputs above + 1 volt.
OVERFLOW.....	Display reads 0.0.0.0.0

FREQUENCY SOURCES

FUNCTION.....	Sine, Square; switch selectable.
FREQUENCY RANGE.....	25 Hz to 15 kHz.
FREQUENCY TEMP COEFF.....	< 0.5 %/°C
AMPLITUDE.....	0 to 20V rms into 600 ohms
DISTORTION (SINE WAVE).....	1% from 1 kHz to 10 kHz
OUTPUT IMPEDANCE.....	Less than 1 ohm
DC OFFSET.....	-18V to +18V variable

Table 1-1. 2590FTS Specification (continued)

MULTIMETER

Display..... 3 1/2 digit liquid crystal, auto polarity and decimal point.

DC Volts (Multimeter)

Accuracy, 1-year..... ± (0.1% of reading + 1 digit).

Input Impedance..... 10 Mohm.

Overvoltage Protection. 1000V dc or peak ac.

Response Time..... 1 sec.

AC Volts (Multimeter)

Accuracy, 1 Year..... see table below.

Crest Factor Range..... 1.0 to 3.0

Input Impedance..... 10M ohm/100 pf.

Overload Protection.... 750V rms or 1000V peak.

Not to exceed the volt-hertz product of 10^7 (except for 10 seconds maximum on 200 mV, 2V range).

Response Time..... 2 seconds maximum within a range.

AC Voltage Accuracy

RANGE	45 Hz to 1 kHz	1 kHz to 10 kHz	10 kHz to 20 kHz
200mV	±(0.8% of READING + 2 DIGITS)		±(1.0% of READING + 2 DIGITS)
2 V			
20 V			
200 V			
750 V		NA	NA

Table 1-1. 2590FTS Specifications (continued)

DC Current (Multimeter)

Accuracy..... + (0.3% of reading + 1 digit)

Burden Voltage..... 0.3V max, 200 uA thru 200 mA ranges, 1.5V max, 2000 mA range.

Overload Protection.... 2A/250V external fuse in series with an internal 3A/600V fuse.

AC Current (Multimeter)

Accuracy, 1 year..... see table below.

Burden Voltage..... 0.3V, 200 uA to 200 mA Ranges, 1.5V, 2000 mA Range.

Overload Protection.... 2A/250V external fuse in series with an internal 3A/600V fuse.

Crest Factor Range..... 1.0 to 3.0

Response Time..... 2 seconds maximum within a range.

AC Current Accuracy

<table>
<tr><th>RANGE</th><th>45 Hz to 2 kHz</th><th>2 kHz to 10 kHz</th><th>10 kHz to 20 kHz</th></tr>
<tr><td>200uA</td><td rowspan="4">+(1% of READING + 2 DIGITS)</td><td rowspan="3"></td><td rowspan="3">+(2% OF READING + 2 DIGITS)</td></tr>
<tr><td>2mA</td></tr>
<tr><td>20mA</td></tr>
<tr><td>200mA</td><td rowspan="2">NA</td><td rowspan="2">NA</td></tr>
<tr><td>2000mA</td><td></td></tr>
</table>

Table 1-1. 2590FTS Specification (continued)

Resistance (Multimeter)

Accuracy, 1 year..... see table below.

Overload Protection... 300V dc/ac rms, all ranges.

Open Circuit Voltage.. less than 3.5V, all ranges.

Response Time..... 1 second, 200 ohm thru 20 kohm ranges,
4 seconds, 200 kohm and 20 Mohm ranges.

Resistance Accuracy

RANGE	ACCURACY	FULL SCALE VOLTAGE	MAX TEST CURRENT
200 ohm *	+ (0.2% OF READING + 1 DIGIT)	.025V	1.3 mA
2 kohm		1.0V	1.3 mA
20 kohm		< 0.25V	10 uA
200 kohm		1.0V	35 uA
2000 kohm	+ (0.5% OF READING + 1 DIGIT)	< 0.25V	0.10 uA
20 Mohm		1.5V	0.35 uA

* For specified accuracy in the 200 ohm range, any residual resistance must be zeroed: record the measurement, then subtract from that the reading obtained with the input leads shorted together.

Table 1-1. 2590FTS Specifications (continued)

Conductance (Multimeter)

Accuracy, 1 year..... see table below.

Overload Protection..... 300V dc / ac rms on all ranges.

Conductance Accuracy

RANGE	ACCURACY	FULL SCALE VOLTAGE	MAX TEST CURRENT
2 mS	+ (0.2% OF READING + 1 DIGIT)	3.5V	1.3 mA
20 uS		1V	10 uA
200 nS	+ (1% OF READING + 10 DIGITS)	1V	.10 uA

Table 1-1. 2590FTS Specification (continued)

DC VOLTAGE SOURCES

OUTPUT	2 Ranges; 0 to 1V, 0 to 10V.
OUTPUT IMPEDANCE	< .040 ohm to the output connector.
TEMPERATURE COEFFICIENT	< (20 uV + 250 ppm)/°C
MAX. LOAD CURRENT	400 mA.
OUTPUT PROTECTION	Protected against continuous short circuit.
CURRENT LIMIT POINT	~ 600 mA.

CURRENT SOURCE

OUTPUT	2 Ranges; 0 to 1000 uA, 0 to 100 mA.
TEMPERATURE COEFFICIENT	< 200 ppm/°C
COMPLIANCE VOLTAGE	+28V max.

LOGIC TIMER

RANGE	1999.9 seconds.
MODES	Pulse,Cycle,Stopwatch.
DISPLAY	4-1/2 digit liquid crystal with decimal p
ACCURACY	+ 0.01% + 1 count 0 to 50 °C
TEMPERATURE COEFFECIENT	< 0.1 ppm/°C
TIMEBASE STABILITY	< 10 ppm/year
OVERFLOW	Display reads 0.0.0.0.0

Table 1-1. 2590FTS Specifications (continued)

GENERAL SPECIFICATIONS

POWER	20 to 34V dc, 3 Amps max.
WARM UP TIME	5 minutes.
DIMENSIONS	15.4 cm H x 33.0 cm W x 45.7 cm L (6.08 in H x 13 in W x 18 in L)
WEIGHT	Approximately 8.6 kg. (19 lbs).

ENVIRONMENTAL

STORAGE TEMPERATURE	-40 °C to 75 °C
OPERATING TEMPERATURE	0 to 50 °C
RELATIVE HUMIDITY	0 to 80% up to 50 °C (non-condensing)
SHOCK AND VIBRATION	Meets MIL-T-2800 Specifications

SECTION 2
Operating Instructions

2-1. INTRODUCTION

2-2. The 2590FTS operator panel is arranged into the functional subsections: multimeter, thermometer, frequency sources, dc voltage sources, dc current cource, and logic timer. Four displays allow for simultaneous measurement of thermometer, frequency counter, multimeter, and logic timer. Adjustments or measurements made on one section will have no effect on any of the other sectons.

2-3. The following paragraphs describe operation of each of these sections. The multimeter is covered first as this section is used to monitor most of the other sections.

NOTE

Instructions for making power input connections are covered in paragraphs at the end of Section 2, under Making Power Connections.

2-4. There are three triangular shaped caution symbols in the temperature section; one on each of the thermocouple input assemblies and one next to the T/C signal select pushbutton. Please refer to the cautions under Temperature Measurement and Calibrator Operation (in later subsections), marked by these symbols in the margin.

WARNING

DO NOT TOUCH TERMINALS WHEN HIGH VOLTAGES ARE PRESENT. ALL SECTIONS OF THE 2590FTS AND ASSOCIATED INPUTS AND OUTPUTS ARE ELECTRICALLY ISOLATED FROM EACH OTHER. UP TO 350V DC OR PEAK AC MAY BE PRESENT BETWEEN TERMINALS IN DIFFERENT SECTIONS OR BETWEEN ANY TERMINAL AND THE INSTRUMENT CASE.

2-5 SHIPPING INFORMATION

2-6. The 2590FTS Electrical Test Set is packaged and shipped in a foam-packed container. Upon receipt of the instrument, a thorough inspection should be made to reveal any possible shipping damage. Special instructions for inspection and claims are included in the shipping carton.

2-7. If reshipment of the instrument is necessary, the original container should be used. If the original container is not available, a new container can be obtained from the John Fluke Mfg. Co., Inc. Please reference the instrument's model number when requesting a new shipping container.

2-8. OPERATING NOTES

2-9. MULTIMETER SECTION

2-10 Multimeter Display

2-11. The multimeter display is a 3 1/2 digit LCD providing 1,999 counts of resolution. A decimal point, polarity indicator, and overrange indicator are also included. Decimal point positioning is automatic and is determined by the selected measurement range.

2-12. Polarity sensing is also automatic, and is valid for dc voltage and current measurements. A minus sign indicates that the input voltage or current is negative with respect to multimeter input common. Voltage or current inputs that are positive with respect to common are indicated by the absence of a minus sign.

NOTE

Two other conditions may cause the negative sign to be displayed, neither of which indicates a valid display. Please refer to paragraphs 2-13 (Overrange) and 2-46 (Resistance).

2-13. Overrange

2-14. An overrange condition is indicated by a "1" followed by three blank digits. (A decimal point may also be present, depending upon the range selected.) An overrange display indicates that the unknown input (voltage, current, resistance, or conductance) is of sufficient amplitude to require that a higher range be selected, and does not necessarily mean that the input will damage the instrument. (Refer to multimeter specifications for DC Volts or AC Volts for overvoltage limits.)

2-15. When measuring resistance, the overrange indication is displayed to indicate an open input condition or an input resistance greater than the selected range can measure.

NOTE

When the instrument comes out of an overrange condition the minus sign may flash momentarily (most likely seen when measuring resistance).

2-16. Measurement Units

2-17. There are no measurement unit indicators on the multimeter display. To determine units of measure note the selected function and range. For example if the volt (V) function is selected, and the 200 mV range is selected, and the unknown input is within the selected range; the display will represent a voltage of between 000.0 and + 199.9 mV.

2-18. Function Switches

2-19. The first four pushbutton switches on the left, directly below the multimeter display, are used to select the desired measurement function.

2-20. The leftmost switch, marked AC/DC, is used in conjunction with the "V" and "mA" switches to determine the type of voltage or current to be measured. If the AC/DC switch is in the OUT position the multimeter is configured for DC voltage or current measurement. If the switch is depressed, only the AC components of the input signal will be measured.

2-21. The V, mA, and K ohm/S switches select the voltage, current or resistance/conductance functions. These three pushbuttons are interlocked. Depressing one pushbutton will cause either of the other two to return to the out position.

2-22. Range Switches

2-23. The next six pushbuttons are used to select the desired measurement range. They provide 5 ranges of AC/DC voltage and current, 6 ranges of resistance, and three ranges of conductance. They are also interlocked. As indicated on the operator panel, any one of the three conductance ranges may be selected by depressing the two appropriate pushbuttons simultaneously.

2-24. Multimeter Input Select Switches

The EXT/INT pushbutton is used to connect either the multimeter external input terminals or the internal select switches to the multimeter input. The EXT/INT pushbutton must be in the OUT position to connect the FREQ, EXT FREQ, DC VOLTS OUT, or DC mA OUT to the multimeter.

2-25. Directly below the function and range switches there is a group of seven pushbutton switches. These switches are used to select the desired input to the multimeter.

2-26. The pushbuttons marked FREQ 1 and 2 connect the outputs of the internal frequency sources to the multimeter input. Both waveform amplitude and dc offset level can be measured by proper multimeter function selection.

2-27. The EXT FREQ pushbutton is used to connect the selected external frequency input to the multimeter input.

2-28. The DC VOLTS OUT 1 and 2 pushbuttons are used to connect either one of the two internal dc voltage source outputs to the multimeter input.

NOTE

The regulation specifications given in Section 1 for the DC Voltage Sources apply to voltage levels present at the output terminals, which is where multimeter measurements are made. If greater measurement accuracy is required (as may be the case if output current is near the maximum specified and the test leads to the load are long) it is suggested that the voltage measurements be made at the load using the multimeter external input.

2-29. The DC mA OUT pushbutton is used to connect the output of the current source to the multimeter mA input. When this switch is depressed the multimeter is placed in series with the internal compliance voltage source and the current source output high terminal. If DC mA OUT is NOT selected the internal compliance voltage source is connected directly to the current source output high terminal.

NOTE

In order for current to flow a load must be placed between the current source HI and LO output terminals.

2-30. The EXT/INT pushbutton is used to connect either the multimeter external input terminals or the internal select switches to the multimeter input. With the EXT/INT pushbutton pushed in the multimeter may be used to measure any external voltage, current, or resistance source that does not exceed specified input limits.

2-31. Multimeter External Input Section

2-32. This section consists of three banana/binding post connectors and a fuse. Voltage, resistance, and conductance inputs are connected between the V/Kohm/S and common terminals. Current inputs are connected between the mA and common terminals. The fuse is to protect the current input circuitry from damage if a current input of greater than 2 amps is applied.

2-33. Voltage Measurements

2-34. To make voltage measurements, use the following procedure:

CAUTION

THE VOLTAGE SOURCE SHOULD NOT EXCEED 1000V DC OR 750V RMS AC OR DAMAGE TO THE INSTRUMENT MAY RESULT.

1. Select the AC or DC volts function.
2. Select the desired measurement range.
3. Select the desired voltage source (any of the internal sources, or the external binding posts)
4. The unknown voltage should now be displayed.

2-35. Under most measurement conditions, source loading errors should not be a problem. If source impedance is 10K ohm or less, the error will be less than 0.1%. Loading error can be calculated using the following formulas:

1. For DC voltage measurements:

$$\text{Error in \%} = 100 \times RS - (RS + 10^7)$$

Where: RS = source resistance in ohms

2. For AC voltage measurements:

$$\text{Error in \%} = \frac{100 \times ZS}{RS + ZIN}$$

Where: ZIN = Effective Input Impedance
ZS = Source Impedance
RS = Source Resistance

ZIN may be computed using:

$$ZIN = \frac{10^7}{\sqrt{1 + (2 \cdot PI \cdot F \cdot RIN \cdot C)^2}}$$

Where: ZIN = Effective Input Impedance
RIN = 10^7 ohms
C = 100×10^{-12} Farads
F = Frequency in Hz
PI = 3.14159

2-36. Composite AC/DC waveforms can also be measured. Measure the ac component of the waveform using the AC function of the multimeter. Measure the dc component using the DC function. The total rms value of the waveform is:

$$\text{rms Total} = \sqrt{(\text{AC Component})^2 + (\text{DC component})^2}.$$

2-37. Current Measurements

2-38. To make current measurements, use the following procedure:

CAUTION

**INPUT CURRENT SHOULD NOT EXCEED 2 AMPS.
OPEN CIRCUIT VOLTAGE SHOULD NOT EXCEED
250V DC or 250V PEAK AC.**

1. Select AC or DC current function.
2. Select desired measurement range.
3. Connect the multimeter into the circuit to be tested. The unknown current should now be displayed.

2-39. If the current source being measured is unregulated, or if the resistance of the multimeter current shunt and fuse represents a significant part (1/1000 or more) of the source resistance, then burden voltage errors may need to be considered. Burden voltage is the voltage drop at the multimeter's terminals when measuring current (that voltage across the multimeter's current shunt and protective fuses).

2-40. Burden voltage error can be calculated using the following formulas:

1. $$EB = \frac{100 \times \text{READING} \times EB(FS)}{\text{FULL SCALE}}$$

   Where: EB = Burden voltage (calculated)
   READING = Displayed Current Reading
   FULL SCALE = Range Selected
   EB (FS) = Specified full scale burden voltage for range selected. (Refer to multimeter DC or AC Current specifications for this value)

2. $$\% \text{ error} = 100 \times \frac{EB}{ES - EB}$$

   Where: EB = Burden Voltage (Calculated)
   ES = Source Voltage

3. Error in AMPS = $\frac{EB \times IM}{ES - EB}$

Where: EB = Burden Voltage (calculated)
ES = Source Voltage
IM = Measured current in amps

2-41. An example of burden voltage calculations follows. Assume these conditions are given: ES = 14V, RL = 9 ohm, IM = 1.497A

1. EB = $\frac{100 \times 1497 \times 0.9}{2000}$ (from spec.)

= 74.9% of 0.9 - 0.674V

2. % Error = 100 X $\frac{.674}{14 - .674}$ = 5.06%

3. Error in amps = $\frac{.674 \times 1.497}{14 - .674}$ = 0.074A

Displayed Current = 1.497A
Actual Current = 1.571A

2-42. Resistance Measurements

2-43. To make resistance measurements, use the following procedure:

1. Select the Resistance function.

2. Select the desired measurement range. The multimeter should display an open circuit condition ("1" followed by three blank digits), with no load connected.

3. Connect the unknown resistance to the multimeter external input.

4. The unknown resistance should be displayed.

2-44. When using the 200 ohm range, more accurate measurements can be made if lead resistance is considered. Short the sampling ends of the test leads together and read the lead resistance and subtract this lead resistance from your measurements.

2-45. The 2 kilohm resistance range with a diode symbol beside the range value has a high enough open circuit voltage to turn on silicon junctions. This range can be used to check silicon diodes and transistors. The other ranges will not turn on silicon junctions and so should be used for making in-circuit resistance measurements.

2-46. If you are reading resistance and the minus sign remains on, there is still energy in the circuit under test. The circuitry may still have power applied or a capacitor may still be charged. Reversing the test leads will result in erroneous readings. If there is any doubt about the circuit under test, read the resistance, then reverse the test leads. If a minus sign is displayed in either case, the circuit must be de-energized before accurate resistance measurements can be made.

2-47. Conductance Measurements

2-48. Conductance is the inverse of resistance and can therefore be computed using the formula S = 1/R.

Where: R = Resistance in ohms
S = Conductance in Siemens

2-49. The three conductance ranges span resistance measurements of 500 ohm to 10,000M ohm. These ranges allow noise free measurements of inverse function components (such as photo diodes, high value resistors, diode and capacitor leakage characteristics, or transistor beta). Make conductance measurements as follows:

1. Select the Kohm/S function.

2. Select the desired range by depressing the two appropriate pushbuttons simultaneously.

3. Connect the unknown resistance to the multimeter external input terminals.

4. The unknown resistance should be displayed in terms of Siemens.

5. To convert the measurement to ohms, divide the reading into 1.

For example: $\frac{1}{1uS} = \frac{1}{1 \times 10^{-6} S} = 1 \times 10^{6}$ ohm = 1 Mohm

2-50. TEMPERATURE SECTION

2-51. Temperature Display

2-52. The thermometer display is a 4-1/2 digit LCD providing 0.1 degree resolution below 2000°C or °F, and 1 degree resolution from 2000°C or °F and above. The selected temperature scale (either °C or °F) is indicated to the right of the temperature display. A decimal point, polarity indication, overrange indication, and open circuit indication are also provided.

2-53. Overrange

2-54. Overrange is indicated by either -0.L or 0.L, depending upon input polarity. An overrange display indicates that the unknown temperature input is of an amplitude greater than the selected thermocouple range. It does not necessarily mean that the input will damage the instrument. (Refer to Table 1-1 for overvoltage specifications.)

2-55. Open Circuit Detection

2-56. A source impedance of 2K ohm or greater will cause the thermometer to display 0.C. This informs the operator of a faulty thermocouple or poor input connection.

2-57. Temperature Scale Selection

2-58. The thermometer will display temperature in either degrees Celsius or degrees Fahrenheit. Scale selection is made using the °F/°C switch located to the far left, below the temperature display. Scale changes can be made at any time, and have no effect on the calibration of the instrument.

2-59. Thermocouple Selection

2-60. The measurement range of the thermometer is determined by the type of thermocouple used as the input device. Any one of eight thermocouple ranges may be selected using the rotary SELECT TYPE T/C switch located below the input modules. Refer to Table 1-1 for thermocouple range information.

NOTE

It is important that the selected range match the type of thermocouple used. Otherwise, all temperature readings will be erroneous.

2-62. Thermocouple Input Select

2-63. There are two thermocouple input modules installed in access ports in the thermometer section. The two modules are identical and each provides one set of screw-type input terminals. This allows switch selectable measurement of two temperature sources, by using the two switches located to the right of the input modules.

2-64. Two thermocouple types may also be used. This, however, requires that the operator reselect thermocouple range as well as thermocouple input.

NOTE

The thermocouple input modules have been calibrated to match the specific tester in which they are installed. Measurement errors will result if they are used in another tester without recalibration.

2-65. Thermocouple Signal Select

2-66. Depress the Thermocouple Signal Select pushbutton to enable the CALIBRATION OUTPUT. This connects the output of the internal calibration source to the input terminals of the thermometer. The calibration voltage therefore appears at the screw terminals on the thermocouple input module selected. When measuring temperature, the T/C Signal Select switch should be in the EXTERNAL INPUT (OUT) position. (Refer to a section which follows for detailed instructions on calibrator operation.)

2-67. Temperature Measurment

2-68. To make temperature measurements, use the following procedure:

1. Remove one or both of the T/C input modules.
2. Connect the selected thermocouple(s) to the screw terminal(s) on the input modules.
3. Connect the input modules to the mainframe through the access ports.
4. Set the T/C type select switch to match the thermocouple selected.
5. Select the desired temperature scale using the $^{o}F/^{o}C$ select switch.

CAUTION

THE MAXIMUM VOLTAGE THAT MAY BE CONNECTED BETWEEN ANY TWO THERMOCOUPLE INPUT TERMINALS IS 350V DC OR 250V RMS AC. GREATER VOLTAGE MAY RESULT IN DAMAGE TO THE INSTRUMENT.

6. Expose the thermocouple probe to the unknown temperature to be monitored, within the thermocouple's specified range.

7. The probe temperature will be displayed (in ^{o}F or ^{o}C).

2-69. Calibrator Operation

2-70. The calibrator section provides thermocouple simulation outputs of between -10 mV and +90 mV. It is used for calibration of external thermocouple indicators. Connect and operate the calibrator as follows:

1. Remove one of the T/C input modules.

2. Connect a length of the desired thermocouple wire between the T/C input module and the external indicator to be tested. Observe proper polarity.

3. Install the T/C input module in the 2590FTS test set.

4. Select the proper T/C Type on the thermometer.

5. Select the thermocouple input (T/C 1 OR T/C 2) that is connected to the external indicator.

CAUTION

TO PREVENT DAMAGE TO THE INTERNAL CALIBRATOR DO NOT CONNECT HIGH VOLTAGES TO ANY OF THE T/C INPUT TERMINALS WHILE THE T/C SIGNAL SELECT PUSHBUTTON IS IN THE CALIBRATION OUTPUT (DEPRESSED) POSITION.

6. Press the T/C SIGNAL select pushbutton to the CALIBRATION OUTPUT (depressed) position.

7. Select the desired temperature scale.

8. Using the COARSE and FINE adjustments in the CAL/OUTPUT section, adjust the calibrator output for the desired temperature display.

9. Adjust the external indicator so that its reading agrees with the 2590FTS thermometer display.

2-71. FREQUENCY SECTION

2-72. Frequency Counter

2-73. Frequency Counter Display

2-74. The frequency counter display is a 5 digit LCD providing 100,000 counts of resolution. A measurement units indicator (Hz), and overflow indication are also provided.

2-75. Overflow

2-76. A frequency of 100,000 Hz or greater will cause the display to indicate an overflow condition. The display will show five zeros separated by decimal points (0.0.0.0.0 Hz).

2-77. Counter Input Select

2-78. There are four interlocked counter input select switches located directly below the counter display. These switches are used to connect the desired frequency source to the input of the frequency counter. The operator can choose between the two internal frequency sources or two external frequency inputs.

2-79. Trigger Level

2-80. A one turn pot is provided to allow the trigger level of the selected external frequency input to be adjusted. When the pot is in the full counter clockwise position (MIN) the counter will trigger on any signal greater than 75 mV rms. Turning the pot clockwise increases the trigger level. This allows the user to adjust the trigger level to prevent counting noise on the input signal.

2-81. Frequency Measurement

2-82. To make frequency measurements, use the following procedure:

CAUTION

INPUT SIGNAL AMPLITUDE SHOULD NOT EXCEED 500V AC PEAK OR 500V DC. ANY AC SIGNALS OF GREATER THAN 100V PEAK SHOULD NOT BE APPLIED FOR LONGER THAN FIVE MINUTES, OR DAMAGE TO THE INSTRUMENT MAY RESULT.

1. Connect the desired frequency source to the frequency counter, using the counter input select switches.

2. The unknown frequency will be displayed.

3. The amplitude of the selected frequency source may be measured using the multimeter, by selecting the proper multimeter input and range.

2-83. Frequency Sources

NOTE

The following instructions apply to both frequency sources.

2-84. Function Select

2-85. The sine and square wave output functions are selected using a push-push switch located in the upper corner of the frequency section.

2-86. Frequency Adjust

2-87. The output frequency is continuously variable from 25 Hz to 15 kHz. One 10-turn coarse and one 10-turn fine adjustment control are provided for this purpose. Clockwise rotation of either control will increase output frequency.

2-88. Amplitude Adjust

2-89. A single 10-turn control is used for output amplitude adjustment. Clockwise rotation of the control will increase the output amplitude. Adjustment range is from 0 to 20V rms.

2-90. DC Offset

2-91. The output waveform may be superimposed on an adjustable dc offset. The offset is continuously variable between -18V dc and +18V dc.

2-92. The offset control, located directly above the output connector, is a combination push/pull switch and 4-turn potentiometer. Pushing the switch in disables the offset (0V dc offset). When the switch is pulled out position, rotating the offset control in a clockwise or counter-clockwise direction will make the waveform offset more positive or more negative, respectively.

2-93. DC VOLTAGE SOURCES

NOTE

The following instructions apply to both dc voltage sources.

2-94. Range Switches

2-95. Two interlocked pushbutton switches are used to select either of two voltage output ranges. On the lower range, output level is continuously adjustable from 0 to 1 V. The upper range provides a maximum output of 10 V.

2-96. Output Adjustment

2-97. Output level is adjusted using a 10-turn coarse control and a 10-turn fine control. Clockwise rotation of these controls increases output level.

2-98. DC CURRENT SOURCE

2-99. Range switching is provided by two interlocked pushbutton switches. On the lower range, output current is continuously adjustable from about 1 uA to 1 mA. The upper range provides a maximum output of 100 mA.

NOTE

There will be no output current flow unless a load is placed across the output terminals. To obtain a full 100 mA output, load resistance should not exceed 280 ohms.

2-100. Output current is adjusted using a 10-turn coarse control and a 10-turn fine control. Clockwise rotation of the controls increases output current.

2-101. LOGIC TIMER

2-102. The logic timer allows the operator to measure the time during which a switch is open or closed, or the time interval between transitions of a system status signal. The timer can also be used as a simple stop watch.

2-103. The logic timer display is a 4 1/2 digit LCD, providing 19,999 counts and a resolution of one tenth of a second. A decimal point and overflow indication are provided.

2-104. Overflow

2-105. The logic timer is capable of measuring delay times up to 1999.9 seconds (approx. 33 min.). If that limit is exceeded the display will indicate a timer overflow condition by displaying five zeros separated by decimal points (0.0.0.0.0).

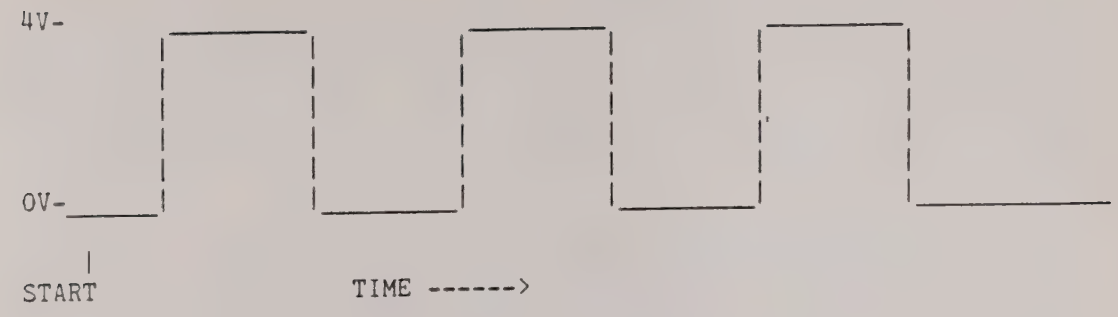

FIGURE 2-1. Sample input waveform

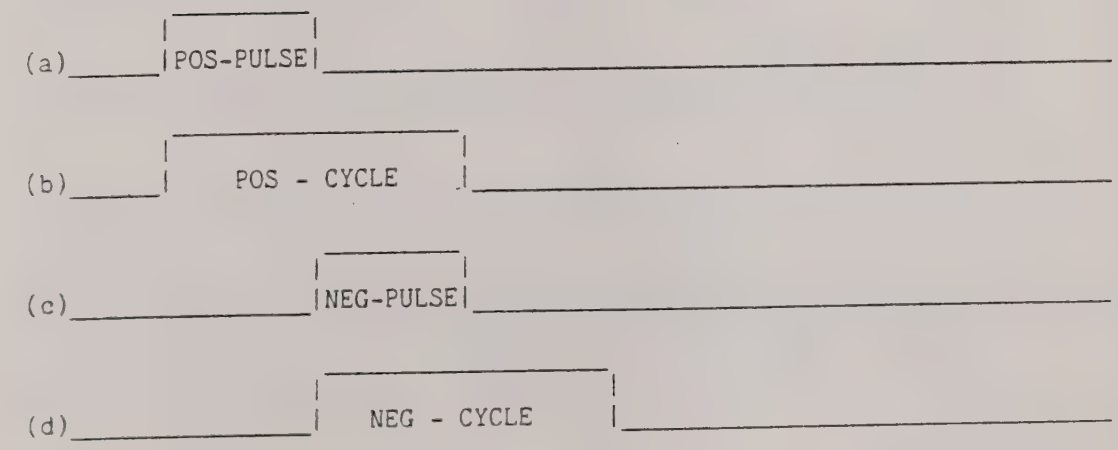

Figure 2-2. Time intervals measured for the input of figure 2-1 with the front pannel controls selected as shown.

2-106. The five modes of operation are discussed below with reference to the above figure.

2-107. Figure 2-1 shows a typical status signal for which the operator may choose to make any of the measurements indicated in figure 2-2. If the front pannel push-button labeled "POS EDGE" is depressed (causing the "NEG EDGE" button to be released), and the "CYCLE/PULSE" push-button is depressed, then when the "START" button is depressed, the Logic Timer will count from the first rising edge of the input signal until the next falling edge. This count period is indicated in figure 2-2a.

2-108. If the operator wishes to count the number of seconds from the first rising edge to the next rising edge, the "POS EDGE" button should be depressed and the "CYCLE/PULSE" button should be released. Then, when the "START" button is depressed, the interval indicated in figure 2-2b will be counted. The timer will stop counting at the second rising edge and display the final count until the "START" button is released. Releasing the "START" button will reset the display to zero.

2-109. Measurement of signals which are normally at a high level and are active low, can be acomplished with the Negative Edge mode. Figure 2-2c shows the measurement of a negative-going pulse by depressing the "NEG EDGE" and releasing the "CYCLE/PULSE" buttons.

2-110. To measure the time interval between the first high to low signal transition (after the start switch) and the next high to low transition, depress the "NEG EDGE" and "CYCLE/PULSE" buttons.

2-111. The logic timer will operate like a stopwatch if both the "POS EDGE" and "NEG EDGE" buttons are depressed at the same time. Now the "START" switch is used to start and stop the timer. The stopwatch function ignores the input, and times the interval from the depression of the start switch until the start switch is released. The time is held on the display after the start switch is released. Another interval can be added to the stored time by again pressing and releasing the start switch, or the dispay can be cleared by releasing either the "POS" or "NEG" edge buttons.

2-112. Connect the Logic Timer to the circuit under test by connecting the circuit ground to 2590A logic timer terminal "D" ; and the active input to the 2590A logic timer terminal "B". See figure 2-3 for input connections.

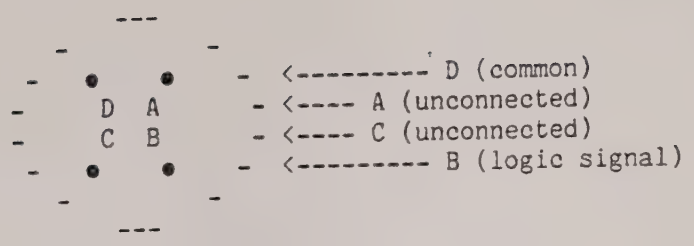

Figure 2-3 Logic Timer Connector on 2590A front panel

2-113.

2-115. MAKING POWER INPUT CONNECTIONS

2-116. Apply power to the 2590FTS as follows:

1. Make power connections to the DC source as shown in Figure 2-4. Pin "A" is the DC + input, pin "C" is DC -, and pin "B" is earth ground.

2. Place the power switch to the ON position. The green power indicator adjacent to the power switch should come on. All four displays should also come on.

3. The instrument is now ready for operation.

CAUTION:

TO PREVENT POTENTIAL FIRE HAZARD OR DAMAGE TO THE INSTRUMENT, THE POWER FUSE SHOULD BE REPLACED ONLY WITH A 3 AMP AGC FAST-ACTING 250V FUSE.

2-117. Front Panel Power Fuse

2-118. The 2590FTS Electrical Systems Test Set is to be operated from a dc power source capable of delivering 20 to 34V at 3 Amps. The power input is protected by a 3 Amp AGC fast-acting 250V fuse, located directly above the power input connector.

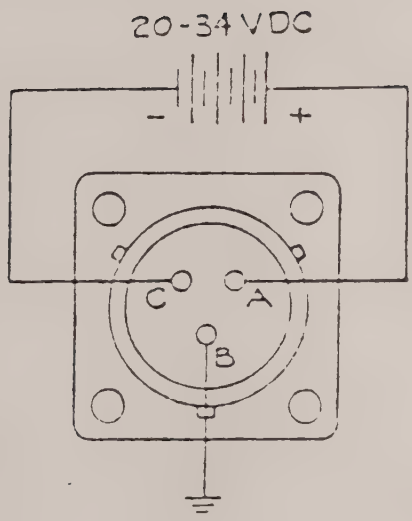

Figure 2-4. Power connections to the 2590FTS , to the connector labeled "24V 3A MAX".

JOHN FLUKE
MANUFACTURING CO., INC.

SEATTLE, WASHINGTON

DOCUMENT NO. A21-50-150 REVISION 0

THIS DOCUMENT UPDATED/REVIEWED ON _____

TITLE: SOLAR TURBINE TEST SET
FACTORY TEST PROCEDURE

RECEIVED
SEP 0 5 1984
FLU... ...LLAS

FLUKE

THIS PAGE IS FOR SIGNATURE APPROVAL ONLY

PRODUCTION TEST for SOLAR TURBINES ELECTRICAL SYSTEM TEST SET

A21-50-150

PREPARED: _____ DATE: 7/23/84
Author

CHECKED: _____ DATE: 23 Jul 84
Test Engineer

APPROVED: _____ DATE: 7-24-84
Production Test Supervisor

APPROVED: _____ DATE: 7-23-84
Project Engineer

APPROVED: _____ DATE: 7-24-84
Engineering Manager

APPROVED: _____ DATE: 7/24/84
Test Manager

APPROVED: _____ DATE: 8/1/84
Q.A. Manager

DOCUMENT CLASSIFICATION: Unrestricted

PRIMARY DISTRIBUTION:

	No. of copies
Engineering Manager	1
Project Manager	1
Customer Service Manager	1
Test Engineer	1
Production Test Supervisor	2
Fluke B.V.	1
Quality Assurance Manager	1
Fluke Service Center Burbank, CA	1

SECONDARY DISTRIBUTION:

NAME	TITLE	DATE	DEPT.	AUTHORIZATION

DOCUMENT CHANGE RECORD

REV.	PAGE	DESCRIPTION OF CHANGE
0	--	Released in

TABLE OF CONTENTS

TABLE OF CONTENTS		4
1.0	PURPOSE AND SCOPE	5
2.0	EQUIPMENT REQUIRED	5
3.0	TEST GUIDELINES	6
5.0	PRELIMINARY TEST	8
	5.1 TURN-ON PROCEDURE	8
	5.2 BRIEF FUNCTIONAL TEST	9
6.0	HEAT RUN	13
7.0	FINAL TEST	14
	7.1 MULTIMETER VOLTS CALIBRATION AND VERIFICATION	15
	7.2 MULTIMETER RESISTANCE/CONDUCTANCE AND CURRENT VERIFICATION	17
	7.3 FREQUENCY COUNTER CALIBRATION	19
	7.4 FREQUENCY COUNTER VERIFICATION	20
	7.5 FREQUENCY SOURCE CALIBRATION	21
	7.6 FREQUENCY SOURCE VERIFICATION	23
	7.7 DC VOLTAGE SOURCE VERIFICATION	24
	7.8 CURRENT SOURCE VERIFICATION	25
	7.9 THERMOMETER CALIBRATION	26
	7.10 CALIBRATION OUTPUT VERIFICATION	30
	7.11 RELAY TIMER CALIBRATION	31
	7.12 RELAY TIMER VERIFICATION	31
8.0	RE-VERIFICATION	32
9.0	TROUBLESHOOTING	33

1.0 PURPOSE AND SCOPE

The purpose of this document is to define procedures for final production testing of the A21-50 turbine electrical systems test set. All units are to be 100% tested. This procedure has three sections:

*PRELIMINARY TEST (Section 5) -- This is the first turn-on test, performed before the bottom shield or carrying case is added. Each section of the unit is quickly tested for proper functioning prior to the Heat Run.

*HEAT RUN (Section 6) -- A four-day (96 hour) environmental stress of heating and cooling. Units are run with no bottom shield and without their carrying case.

*FINAL TEST -- This procedure has two parts--before and after the unit is installed in its carrying case:

a) Unit outside carrying case -- FINAL CALIBRATION (Section 7) Complete calibration and verification of all functions.

b) Unit installed in carrying case -- RE-VERIFICATION (Section 8) Complete re-verification of all functions to ensure specifications have not altered due to the carrying case. The most sensitive areas have been found to be the multimeter AC functions and the thermometer.

2.0 EQUIPMENT REQUIRED

This is equipment required for both the Preliminary Test and the Final Test. Instruments preceded by an asterisk (*) must bear a current calibration label.

MODEL	INSTRUMENT	WHERE USED
* JF 8800B or equiv.	Digital Voltmeter	Turn-on procedure
* TEK 465 or equiv.	Dual Trace Scope	Freq Source Cal.
* 2590FTS - 01 or equiv. (Power supply must provide 24V @ 2A, regulated or unregulated.)	DC Supply	To power the A21-50
* JF 3330B or equiv.	Voltage Calibrator	Thermometer Cal.
* JF 5100B or equiv.	Meter Calibrator	Multimeter Cal.
* JF 6010/6011 or equiv.	Signal Generator	Freq Counter Verif.
* JF FTE-0770	100:1 Divider	Thermometer Cal.
* JF 1952B or equiv.	Freq./Period Ctr.	Relay Timer Cal.
CST-101	Oven Test Supply	Heat Run
CST-011	Warm Up Supply	For Cal.
CST-012	Relay Timer Test Fixture	Relay Timer Verif.
GR 1434-G	Decade Resistor	Turn-on Procedure
* Princo ASTM56C or * JF 2180A	Mercury Thermometer \ Thermometer /	Thermometer Cal.
---	Lag Bath	Thermometer Cal.

3.0 TEST GUIDELINES

3.1 VISUAL CHECK

During the testing, inspect each unit for workmanship errors (solder splashes, broken traces, missing or misclocked components, etc.) or damage (smoke, burning smell, discoloration, etc.). Route any unacceptable units to the responsible technician for repair. After repair, reburn the UUT in accordance with SOP 39.2, then completely retest it.

3.2 STATIC AWARENESS

The A21-50 contains CMOS circuitry on both the main circuit board and display board. These integrated circuits can be destroyed by electrostatic discharge resulting from careless handling. To prevent this possibility it is important that the following precautions be observed when calibrating or servicing the instrument.

1) Never remove, install or otherwise connect or disconnect PCB's and/or components without first turning the A21-50 power switch to OFF.

2) All servicing should be performed at a static free work station. All work surfaces should be grounded. Pink poly bench top covering connected to earth ground is recommended.

3) All service personnel should be connected to earth ground using wrist straps.

4) Keep plastic, vinyl, and Styrofoam out of the immediate work area.

5) Handle circuit boards and integrated circuits by their edges only. Never handle PCB's or IC's by their connectors.

6) Use a grounded tip soldering iron only.

3.3 CLEANING

Clean the front panel and case with denatured alcohol or a mild solution of detergent and water. Clean dust from the circuit boards with low pressure dry air. Contaminants can be washed from the circuit boards with demineralized water and a soft brush (avoid getting excessive amounts of water on the switches).

CAUTION

Do not use aromatic hydrocarbons or chlorinated solvents for cleaning. These solutions will react with plastic materials of the instrument. If freon T.F. degreaser is used, be careful to keep it away from the switch decks. Freon cleaners remove lubricants from the switches and may force contaminants into them.

4.0 FUSE REPLACEMENT

The A21-50 has two fuses accessible on the front panel. F1 is the power fuse and should be replaced, when necessary, with a fast-acting 3A AGC 250V fuse. F2 protects the multimeter mA input and should be replaced with a fast-acting 2A AGC 250V fuse.

A third fuse, F3, is located inside the instrument on the rear of the front panel on the Input Circuit Board. F3 is a 3A 600V fuse which provides additional protection for the multimeter mA input in the event that the test leads are accidently connected to a circuit with a voltage of over 250V. Replacement of this fuse will require the instrument to be opened.

CAUTION

Remove all test leads and disconnect the unit from the power source before attempting fuse replacement.

5.0 PRELIMINARY TEST

This test has two parts: Turn-On Procedure and Brief Functional Test. These are performed prior to the Heat Run when the unit is assembled and first turned on (but the unit does not yet have its bottom shield installed, and is not yet installed in its carrying case).

5.1 TURN-ON PROCEDURE

5.1.1 Set Up

Note: Switches S401 thru S404 are NOT to be switched with power applied. Turn UUT power off. Turn on (push down) or turn off (pull top up) the appropriate switch (S401-S404), and reapply power to the UUT.

1) Turn off the four DC to DC inverter supplies by pulling up on the tops of S401 thru S404. This enables checking the +12V pre-regulator while unloaded.

2) Connect voltmeter between pre-regulator ground #1 at leg of R431 (side connected to U401-8), and +12V pre-regulator out, at leg of L401 (connected to C406 +side).

3) Turn all front panel controls fully counterclockwise (may leave Fine adjustments turned up).

4) Connect UUT to a 24VDC 2 Amp power source.

5.1.2 Power On

1) Turn UUT power on.

2) Verify that green power indicator turns on and that DVM reads 12VDC ± .8V. Verify that input current does not exceed 30mA steady state.

3) Verify a square wave of period 30 to 45us (rising-edge to rising-edge) at U404 pins 2 and 4. A period outside this range is not acceptable.

4) One at a time, turn on S402 thru S404, and check for circuit activation. Remember: turn UUT power off before switching S401 thru S404, then reapply power.

SWITCH	ACTIVATES	ADDED 24V CURRENT
(none)	Relay timer LDC Relay timer	Always active
S401	Multimeter LCD Current sources	About 50ma
S402	DC Voltage sources	About 70ma
S403	Freq counter LCD Freq source #2	About 255ma
S404	Thermometer LCD Freq source #1	About 380ma

The total 24V current consumption should not exceed 800mA.

5.1.3 12V Adjust

1) With all instrument sections powered up, connect DVM between R431 (side connected to U401-8) and L401 (side connected to C406 +)

2) Adjust potentiometer R434 in pre-regulator section for a DVM reading of 12V ± .050V .

5.2 BRIEF FUNCTIONAL TEST

This is the first real test of assembled unit, performed before the unit goes into the oven. Its purpose is to ensure all functions operate, and that all adjustments are within range of calibration. This test is performed before the bottom shield is installed or the carrying case installed. (These are installed after the Heat Run.) Any faulty components should be caught by this test so that once the bottom shield is installed (for calibration) it won't have to be removed.

5.2.1 Set Up for Display Check

1) Install the microprocessor, U4, and a programmed EPROM in the thermometer section.

2) Select °F in temperature section.

3) In multimeter section, select DC, volts, 2V range

4) In Multimeter Input Select section, select EXT INPUT

5) In relay timer, section, depress DELAY PICK-UP; leave the other pushbuttons out.

5.2.2 Display Check

1) Turn UUT power on.

2) Verify input current ≤ 800mA from 24V supply.

3) Verify temperature display of '44 .3°F' for about 10 sec., then some unimportant reading.

4) Verify freq. counter display of XXXXXX Hz (X =don't care).

5) Verify Multimeter display of ± .00X

6) Verify Relay Timer display of 000.0

5.2.3 Thermometer Section

1) Set-Up:

a) Select °F.

b) Select External Input.

c) Select T/C Type K.

d) Connect a shorting wire across the T/C input drawer #1 screw terminals.

e) Select T/C 1.

2) Verify a temperature display of room temperature ±10°F.

3) Select °C temperature scale.

4) Verify reading converts to °C. [(°F-32)/1.8]

5) Select T/C 2 (with open input).

6) Verify a display of 0.C °C.

5.2.4 Calibration Output

1) Select Calibration Output mode.

2) Verify temperature display of -0.L °C with Cal/Output Coarse adjust fully CCW.

3) Adjust Coarse control clockwise.

4) Verify that display changes as control is adjusted.

5) Verify a temperature display of 0.L °C with the Coarse control fully clockwise.

5.2.5 Frequency Counter

1) Select ext. #1.

2) Connect 6010 to ext. #1.

3) Adjust 6010 for an output of 90KHz and approx. 5VRMS.

4) Turn the front panel Trigger Level adjust fully CW.

5) Adjust C109 for a UUT counter display of 90 kHz.

6) Adjust 6010 to 110 kHz.

7) Verify a UUT counter display of 0.0.0.0.0 Hz (overflow).

5.2.6 Frequency Source #1

1) Set-Up:
a) In Frequency Source #1 section on main PCB, adjust R144, R145, R146, and R148 near the center of their ranges.

b) Select square wave function in Frequency Source #1 section.

c) Place 600 ohm, ±12 Ohms, 4W load across Freq Source #1 output.

d) Connect oscilloscope across 600 ohm load resistor.

2) Adjust Frequency Source #1 Coarse and Fine controls for a square wave amplitude of 20V P-P at 1 kHz (use UUT counter).

3) Set the Frequency Source at 40 Hz; adjust the 40 Hz 50% duty cycle trim pot R110 for 50% duty cycle.

4) Using an oscilloscope adjust R146 on main PCB for a 50% duty cycle at 1 kHz.

5) Select sine wave function.

6) Re-adjust Fine and Coarse Amplitude output for 20V P-P sine.

7) Adjust R145 and R144 on main PCB for symmetrical sinewave form.

5.2.7 Frequency Source #2

1) Set-Up:

a) In Frequency Source #2 section on main PCB, adjust R175, R174, R176, and R182 to the center of their ranges.

b) Select square wave function in Frequency Source #2 section.

c) Same as #1.

d) Same as #1.

2) Same as #1.

3) Adjust R191

4) Adjust R176

5) Same as #1.

6) Same as #1.

7) Adjust R174 and R175.

5.2.8 Multimeter

1) Set multimeter to DC volts, 2V range, EXT INPUT

2) Connect output of 5100 to UUT multimeter ext. input.

3) Adjust 5100 output to +1.900 VDC.

4) Adjust R204 on main PCB for multimeter display of 1.900 ± 1 count.

5) Adjust 5100 output to +1.900 VAC at 100Hz.

6) Adjust R219 for display of 1.900 ± 1 count.

5.2.9 DC Volts #1

1) In Multimeter Input Select section, select DC Volts Out #1.

2) In multimeter section select 20V range.

3) Select 10V output range in DC Volts Out.

4) Verify that the Fine and Coarse controls can adjust the DC output to ≥ 10.0 V at max. amplitude, and ≤ 0.0 V at minimum.

5.2.10 DC Volts #2

1) Select DC Volts Out #2.

2) Repeat section 5.2.9 above for DC Voltage Source #2.

5.2.11 DC mA Out

1) Multimeter Input Select section, select DC mA out.

2) In multimeter, select DC, mA, 200 mA range.

3) In DC mA Out section, select the 100 mA output range.

4) Connect a short across the current source output.

5) Adjust current source output controls fully clockwise.

6) Verify that the UUT multimeter reading does not fall below 100.0 mA as it warms up; allow three minutes to warm up.

5.2.12 Relay Timer

1) In Relay Timer section, select Delay Pick-Up mode. Depress the arm and start pushbuttons (they should latch down).

2) Verify that timer display is incrementing in .1 sec. steps.

3) Release start pushbutton.

4) Verify that timer display stops incrementing.

6) Depress start pushbutton.

8) Verify that after count 1999.9 the timer displays 0.0.0.0.0 and stops incrementing. This may be done after the heat run, as the counting will require 30 minutes.

6.0 HEAT RUN

1) Remove the 3A fuse from the front pannel power fuse holder if it is installed, and save it to replace after the final test. Install a 2A fast-blow fuse at the front panel location, for protection during the heat run.

2) Install the unit in the oven with the following loads and settings: (Under these conditions the unit should draw about 1.8 amp at 24V dc.)

SECTION	LOAD	SETTING
Frequency Source #1	620 ohms / 2W	1 kHz, 10 Vrms*
Frequency Source #2	620 ohms / 2W	1 kHz, 10 Vrms*
DC Volts Out #1	13 ohms / 5W	5.2 Vdc
DC Volts Out #2	13 ohms / 5W	5.2 Vdc
DC mA Out	250 ohms / 2W	50 mA

*DC Offset pulled out (ENABLED) and centered for both Frequency Source #1 and #2.

3) After 96 hours, remove the unit from the oven. Check the unit visually for any gross failures as shown by dead displays or excessive heat. If a fault is detected, requiring parts to be replaced, then make sure the replacement parts have 96 hours of burn-in if they are crystals or semiconductors (resistors, capacitors, inductors, switches and mechanical parts need not be burned-in).

4) Re-install the 3A fast-blow fuse in the Power fuse location.

7.0 FINAL TEST

7.0.1 This section describes calibration and verification of the A21-50. This final test is similar to, though more rigorous in places, than the Performance and Calibration tests given in Section 4 of the Solar Turbines FT-50010 Service Manual (the sections are in different order). The subsections to this procedure are as follows:

* An asterisk means no calibration is required.

	CALIBRATION Section	VERIFICATION Section
Multimeter		
Volts	7.1	7.1
Current/Resist./Conduct.	*	7.2
Frequency Counter	7.3	7.4
Frequency Sources	7.5	7.6
DC Voltage Sources	*	7.7
DC Current Sources	*	7.8
Thermometer	7.9	7.14
Relay Timer	7.10	7.11
Calibration Output	*	7.12
Thermocouple Input Assy.	7.14	7.14

7.0.2 Streamlining the Verification Procedures

The procedures throughout Section 7 call for testing the instrument with the circuitry removed from the carrying case. The technician calibrates and then verifies each section. These verifications are actually redundant to an experienced technician, because when the unit is installed in the case, it will be fully re-verified. These verification procedures are included for the sake of technicians unfamiliar with the instrument, to make sure the instrument is verified before it is assembled in its carrying case. Once the instrument is assembled, it should not have to be disassembled again. As the technician becomes confident of these procedures, he can simplify them by verifying only those points that have proven to be trouble spots. Thus, an experienced technician may choose to bypass verification procedures in Section 7 and rely instead on the verifications in Section 8 (when the instrument is installed in its carrying case).

7.0.3 Set-Up

Install the bottom shield on the A21-50 to be calibrated. All tests should be conducted with an ambient temperature of 25 °C ±2 °C.

7.1 MULTIMETER VOLTS CALIBRATION AND VERIFICATION

Don't put screws in top of shield for test

7.1.1 DC Volts Calibration

1) In the multimeter input select section of the A21-50, select the multimeter External Input.

2) In the multimeter section, select DC volts, 2V range.

3) Connect the HI output of a meter calibrator (Fluke 5100B or similar) to the multimeter external V/Kohm input. Connect the LO output of the calibrator to the multimeter common input.

4) Adjust the calibrator output to 1.9000V dc. Adjust R204 in the A21-50 for a multimeter display of exactly 1.900.

5) Reverse the polarity of the calibrator output. Verify a multimeter display of -1.900 ± 2 counts.

7.1.2 DC Volts Verification

1) Connect the HI output of the meter calibrator to the V/Kohm/S multimeter input. Connect the calibrator LO output to the multimeter COMMON input.

CAUTION

To avoid exceeding the instrument's common mode limits, be careful to make the input connection as described above.

2) In the multimeter section, select the DC V function.

3) Referring to the following table, select the proper multimeter range and meter calibrator output and verify proper display for each step.

STEP	RANGE	CALIBRATOR OUTPUT	DISPLAY
1	200 mV	+190.0 mV	+189.7 to +190.3
2	2 V	+1.900 V	+1.897 to +1.903
3	20 V	+19.00 V	+18.97 to +19.03
4	20 V	-19.00 V	-18.97 to -19.03
5	200 V	+190.0 V	+189.7 to +190.3
6	1000 V	+1000 V	+998 to +1002

DC VOLTAGE TEST

7.1.3 AC Volts Calibration

1) In the multimeter section of the A21-50 select the AC volts function, 2 volt range.

2) Adjust R221 in the multimeter section to the center of its range.

3) Set the calibrator for an output of 1.900 V at 100 Hz. Adjust R219 for a multimeter display of exactly 1.900 when the front panel is closed.

4) Set the calibrator for an output of 190.0 mV at 100 Hz. Adjust R221 for a multimeter display of exactly .190 (in the same 2V range).

5) Repeat steps 3) and 4) until both readings are correct within 1 count.

Go to paragraph 7.1.3, pg. 19 freq. counter cal.

6) Select the 20V range in the multimeter section.

Note: The following adjustments to C201 and C204 are to be made with the top cover closed and the unit tipped up on the bottom edge of the chassis and bottom edge of the front panel. This is to relieve any pressure on the bottom shield so that it will take its natural form as it will be in the carrying case. The shield position has a substantial effect upon high frequency readings.

7) Apply 19.00V at 10 kHz. Adjust C201 for a multimeter display 19.00.

8) Select the 200V range.

9) Apply 110.0V at 10 kHz. Adjust C204 for a multimeter display of 110.0 .

7.1.4 AC Volts Verification

1) Connect the HI output of the meter calibrator system to the V/Kohm/S multimeter external input. Connect the LO output of the calibrator to multimeter external input COMMON.

CAUTION

To avoid exceeding the instrument's common mode limits, be careful to make the input connection as described above.

2) In the A21-50 multimeter, select the AC V function.

3) Referring to the following table, select the proper multimeter range and calibrator output, and verify proper display for each step. (These tolerances are intentionally 80% of the specification tolerances.)

STEP	RANGE	CALIBRATOR OUTPUT	FREQ	DISPLAY READING
1	200mV	10.0 mV	100 Hz	9.7 to 10.3
2	200mV	190.0 mV	100 Hz	188.8 to 191.2
3	2V	1.900 V	100 Hz	1.888 to 1.912
4	20V	19.00 V	100 Hz	18.88 to 19.12
5	200V	190.0 V	100 Hz	188.8 to 191.2
6	750V	750 V	100 Hz	745 to 755
7	750V	750 V	1 kHz	745 to 755
8	750V	250 V	1 kHz	247 to 253
9	20V	1.00 V	10 kHz	0.97 to 1.03
10	20V	10.00 V	10 kHz	9.94 to 10.06
11	20V	19.00 V	10 kHz	18.90 to 19.10
12	200V	110.0 V	10 kHz	109.3 to 110.7
13	20V	19.00 V	20 kHz	18.83 to 19.17

AC VOLTAGE TEST

7.2 MULTIMETER RESISTANCE/CONDUCTANCE AND CURRENT VERIFICATION

Use the following procedures to verify proper operation of the remaining multimeter sections (resistance, conductance, and current). These functions require no calibration.

7.2.1 Resistance/Conductance Verification

1) Connect a short across the V/Kohm/S external input terminals.

2) In the multimeter section, select the Kohm function, 200 ohm range.

3) Verify a multimeter reading of 00.0 to 00.4 ohm.

4) Remove the short from the multimeter external input so that the input is now open.

5) Select the conductance function, 200 nS range.

6) Verify a multimeter reading of 00.0 to 00.3.

7) Connect the meter calibrator to the A21-50 multimeter V/Kohm/S and COMMON external inputs.

8) Referring to the following table, select the proper multimeter range and meter calibrator output and verify proper display for each step.

9) *200 ohm range accuracy.
To compensate for lead resistance and 5100B internal resistance, set the 5100B to output one ohm and note the reading on the A21-50 multimeter. Using the edit controls on the 5100B adjust the 5100B to indicate the same reading as the A21-50. Press the 'NEW REF' button on the 5100B. Set the 5100B to 100 ohm output. Adjust the edit control to match the 5100B display to the A21-50 display. The percentage error indicated by the 5100B should be between +0.3% and -0.3%. Continue with the verification steps listed below.

STEP	RANGE	CALIBRATOR OUTPUT	DISPLAY READING
1*	200 ohm	100 ohm	99.7 to 100.3*
2	2 k ohm	1 k ohm	.997 to 1.003
3	20 k ohm	10 k ohm	9.97 to 10.03
4	200 k ohm	100 k ohm	99.7 to 100.3
5	2000 k ohm	1 M ohm	994 to 1006
6	20 M ohm	10 M ohm	9.94 to 10.06
7	200 nS	10 M ohm	98.0 to 102.0
8	20 uS	100 k ohm	9.97 to 10.03
9	2 mS	1 k ohm	0.997 to 1.003

RESISTANCE/CONDUCTANCE VERIFICATION

7.2.3 DC Current Verification

1) Connect the HI output of the meter calibrator to the mA external input of the multimeter. Connect the calibrator LO output to the multimeter external input common.

2) In the A21-50 multimeter section, select the DC mA function.

3) Referring to the following table, select the proper multimeter range and calibrator output, and verify proper display for each step. (These tolerances are intentionally 80% of the specification tolerances.)

STEP	RANGE	CALIBRATOR OUTPUT	DISPLAY READINGS
1	200 uA	190.0 uA	189.4 to 190.6
2	2 mA	1.900 mA	1.894 to 1.906
3	20 mA	19.00 mA	18.94 to 19.06
4	200 mA	190.0 mA	189.4 to 190.6
5	2000 mA	1900 mA	1894 to 1906

DC mA VERIFICATION

7.2.4 AC Current Verification

1) Connect the HI output of the meter calibrator to the mA external input of the multimeter. Connect the calibrator LO output to the multimeter external input common.

2) In the A21-50 multimeter section, select the AC mA function, 200 uA range.

3) Program the multimeter calibrator for an output level of 190.0 uA at a frequency of 1 kHz.

4) Verify a multimeter display between 188.3 and 191.7 uA.

7.3 FREQUENCY COUNTER CALIBRATION

The following procedure should be used for calibrating the frequency counter section of the A21-50.

1) Make sure the frequency counter shield is in place when this calibration is performed. This is the shield which covers components R102 - R106, among others.

2) Connect the frequency generator to the EXT. 1 input and adjust it for 90 kHz, 5V rms. Press the EXTERNAL 1 push button (below the counter display). Turn front panel Trigger Level adjust fully ~~cw.~~ ccw.

3) Adjust C109 for the UUT counter reading of 90,000 Hz.

4) Adjust the input to 100 Hz at 5V rms.

5) Verify that the UUT counter display reads 100 Hz ± 1 Hz.

6) Apply 110 kHz at 5V rms.

7) Verify that the UUT reads overflow (0.0.0.0.0 Hz).

8) Apply 90 kHz at 200mV rms.

9) Slowly turn the Trigger Level adjust clockwise and verify that the counter stops responding to the input at some point.

Go to paragraph 7.11 page 31 and Cal. the relay timer

7.4 FREQUENCY COUNTER VERIFICATION

Use the following procedure to verify operation of the A21-50 frequency counter section.

1) Select External Frequency No. 1 in the A21-50 Audio Frequency Section.

2) Connect the output of the signal generator (Fluke 6011 or equivalent) to the External Frequency No. 1 input connector on the A21-50.

3) Select External Frequency No. 1 in the Multimeter Input Select section.

4) Select AC Volts function 200mV range in the Multimeter Section.

5) Turn front panel Trigger Level adjust fully CCW.

6) Adjust the signal generator for an output of 25 kHz. Using the A21-50 multimeter as a reference, adjust the output amplitude to 75 mV.

7) Verify an A21-50 frequency counter reading of 25000 Hz ± 2 Hz.

8) Repeat steps 6) and 7) for output frequencies of 50 kHz and 99 kHz.

9) Adjust the signal generator for an output frequency of 101 kHz. Verify that the A21-50 frequency counter indicates an over flow condition (0.0.0.0.0 Hz).

10) Select External Frequency No. 2 in the Audio frequency and Multimeter input select sections.

11) Connect the signal generator output to the External Frequency No. 2 input on the A21-50. Repeat steps 4) through 8) and verify proper A21-50 counter readings.

7.5 FREQUENCY SOURCE CALIBRATION

NOTE

Calibration of the frequency sources should be performed <u>after</u> calibration of the multimeter and frequency counter sections.

The following procedure should be used to calibrate both frequency sources in the A21-50. Each component designator refers to Frequency Source No. 1, followed by a number enclosed in parentheses which refers to Frequency Source No. 2 Example: R145 (175).

1) Set-Up

a) Connect a 600 Ohm, ±12 Ohm, 4 watt resistor across the frequency source output.

b) Connect an oscilloscope across the 600 ohm load on the source under test.

3) 50% Duty Cycle

a) On the A21-50 front panel select the square wave function.

b) Just below the frequency display, select the frequency source under test (#1 or #2).

c) Adjust the frequency source for an output frequency of 40 Hz ± 2 Hz (as displayed on the A21-50 frequency counter).

d) Adjust the frequency source amplitude for a 20 Volt peak to peak square wave as displayed on the oscilloscope.

e) At 40 Hz: Adjust R110 (191) for an output duty cycle of 50% ± 1%. (Notice the trimmer varies the length of the lower half-cycle of the square wave, but not the length of the upper half-cycle.) On the first attempt, it may not be possible to trim the waveform to 50%. If this happens, the other duty cycle adjustment (at 1 kHz) is too far out of adjustment, so go on to the step f.

f) At 1 kHz: Adjust the frequency source for an output frequency of 1000 ± 10 Hz (same amplitude of 10.0 Vrms).

g) At 1 kHz: Adjust R146 (176) for an output duty cycle of 50% ± 1%. Doing this will affect the duty cycle at 40 Hz, so the next step is important.

h) Alternate between 40 Hz and 1 kHz, adjusting (or checking) the duty cycle until they are both at 50% ± 1%.

i) In the Multimeter Select Section select the frequency source under test. In the Multimeter Section, select 200 VAC range and function.

j) Adjust the frequency source for a 60 Hz ± 2 Hz square wave at 20 Vrms ± 0.2 V.

k) Select 20 VDC range and function. Pull out DC Offset and check for span of at least -18.1 V to +18.1 V. (Note: some rattle in the frequency display is normal with DC Offset at or below -18.1 V)

4) Distortion Adjustment. The purpose here is to adjust the sine wave distortion controls to match its shape to that of a true sine wave.

a) Display a true sine wave either by displaying it on the 'scope from an external generator (Fluke 6011A, or equivalent, set to 1 kHz, 10 V rms), or by a graticule overlay (where the sine wave is simply drawn on the screen).

b) Set the A21-50 frequency source under test to its sine wave output, approximately 1 kHz, 10 V rms. Adjust the 'scope so this signal is superimposed over the true sine wave.

c) Adjust R145 (175) and R144 (174) to match the waveforms, especially making sure the positive peak is the same amplitude as the negative peak.

5) Square Wave Amplitude Adjustment

a) Select the square wave function. Adjust the frequency source Amplitude to maximum, and frequency to 15000 Hz ± 100 Hz. Adjust R148 (178) until the square wave output amplitude is 21.0 ± 0.2 Vrms (also as measured by the A21-50 multimeter in the AC volt 200V range).

b) Turn on (pull out) the DC Offset knob and turn it fully CCW and fully CW. Verify that the square wave amplitude stays at or above 20.1 Vrms with the 620 ohm load.

7.6 FREQUENCY SOURCE VERIFICATION

Use the following procedure to verify operation of both frequency source sections of the A21-50.

1) Select Frequency Source 1 in the Audio Frequency Signal Select section. (These steps are later repeated for Frequency Source 2).

2) Connect a 600 Ohm, ±12 Ohm, 4 watt resistive load across the output of the A21-50 frequency source that is to be tested.

3) Sine Wave: Select the sine function.

4) AC Amplitude:

   a) Press the multimeter input switch for the frequency source under test (FREQ 1 or FREQ 2), and select AC Volts, 200 V range.

   b) To measure the ac amplitude under worst-case loading, pull out the DC Offset control and set it for an offset of -18.1 V.

   c) Verify that the frequency source can be adjusted for an amplitude of 20.1 V rms (+.2, -.0 V rms) and a frequency of at least 15000 Hz. Perform this verification without the 'scope attached to the load; its capacitive load may give a false reading (too high or too low). Leave the source at these adjustments for the next DC amplitude test.

   d) Connect a 'scope to the output and check that the waveform is clean. (When observing the square wave, note that it is expected to have rounded leading edges at 15 kHz.) Disconnect the 'scope before proceeding.

5) DC Offset:

   a) In the multimeter section, select DC Volts, 200 V range.

   b) With the DC Offset control pulled out and fully counter-clockwise, verify a UUT multimeter display of -18.1 V or more negative. Be sure you are performing this test with the ac amplitude at 20.0 V rms, 15 kHz (as set in step 4c), for worst-case loading. (A reading of -18.0 V is not adequate; this extra .1 V margin is necessary to ensure the instrument will meet spec.)

   c) Rotate the DC Offset control fully clockwise. Verify a UUT multimeter display of +18.1 V or greater.

   d) Short the output for 10 seconds (maximum of 1 minute). Remove short and verify both AC output and DC Offset return to normal values.

6) Square Wave: Repeat steps 4 and 5 with the square wave selected.

7) Repeat steps 3-6 but with the frequency source adjusted to 50 Hz in steps 4c and 5b (and same amplitude as before).

8) With the square wave selected and the DC Offset defeated (pushed in), set the frequency to 40 Hz (and the same 20 V rms amplitude). Connect a 'scope and verify the duty cycle is 50% ± 5%.

9) Select Frequency Source 2 and repeat steps 2-8 for this other source.

7.7 DC VOLTAGE SOURCE VERIFICATION

Use the following procedure to verify proper operation of both of the A21-50 DC voltage source (DC Volts Out) sections. Note: The DC voltage sources do not require calibration.

1) Connect a 25 ohm 10 watt 5% resistor (JF P/N 733469) to the No. 1 DC Volts Out output and press the multimeter input switch for DC Volts Out #1.

2) 1V Range:

   a) In No. 1 DC Volts Out section, select the 1V range.

   b) In the multimeter section, select DC volts, 2V range.

   c) Verify that the Coarse and Fine controls can adjust the DC Volts Out to $\geq$ 1V at max. amplitude and $\leq$ 0.0 mV at min. amplitude.

3) 10.0 V Range:

   a) In No. 1 DC Volts Out section, select the 10V range.

   b) In the multimeter, select the 20V range.

   c) Verify the controls can adjust the DC Volts Out to $\geq$ 10.5V at max. amplitude and $\leq$ .00 V at min. amplitude.

4) Short-Circuit Current:

   a) Measure the short-circuit current from the DC Volts Out with the UUT multimeter by connecting the external mA input terminals across the load (HI of DC Volts Out to mA terminal of multimeter, and LO to COM).

   b) In the multimeter section, select DC mA, 2000 mA range.

   c) With the DC Volts Out voltage set to 2.00 V or greater, verify an A21-50 multimeter reading of less than 600 mA.

5) Repeat steps 1-4 for No. 2 DC Volts Out.

7.8 DC CURRENT SOURCE VERIFICATION

Use the following procedure to verify proper operation of the A21-50 DC current source (DC mA Out) section. Note: The current source requires no calibration.

1) Connect a 280 ohm (± 3 ohm), 8 watt resistor across the A21-50 DC mA Out outputs. (This high wattage is necessary to keep the temperature coefficient low, so the resistor value will not increase appreciably as it heats up.)

2) 1 mA Range:

   a) Select the 1 mA range in the DC mA Out section.

   b) Select DC mA Out in the multimeter input select section.

   c) In the A21-50 multimeter, select DC mA, 2 mA range.

   d) Verify that the current source can be adjusted for an output of at least 1.000 mA.

3) 100 mA Range:

   a) Select the 200 mA range in the multimeter section.

   b) Select the 100 mA output range in the DC mA Out section.

   c) Verify that the current source can be adjusted for an output greater than 100.0 mA.

   d) Allow 3 minutes for the circuit to warm up. Verify that the current does not drop below 100 mA.

NOTE:

If the output cannot be adjusted to at least 100 mA, verify that the load resistor is within tolerance (277 to 283 ohms) when it is warm.

4) Short-Circuit Regulation:

   a) Adjust the DC mA Out for an output of 100.0 mA.

   b) Connect a short across the load resistor. Verify that the reading does not change by more than .2 mA.

7.9 THERMOMETER CALIBRATION

The following procedure should be used for calibrating the thermometer section of the A21-50.

7.9.1 A/D Calibration

1) Turn Frequency Source #1 and #2 amplitudes down all the way (to reduce interference). Set temperature switch to °F. Set the T/C signal select for External Input. With instrument power off, connect a jumper wire between TP9 (linear pin of U4) and TP19 (digital common, -15V).

2) Turn power back on and allow the A21-50 to stabilize for 5 minutes.

3) Connect equipment as shown in the following figure using input module T/C #1 (actually, either one will do). Press the T/C #1 pushbutton. Observe proper polarity.

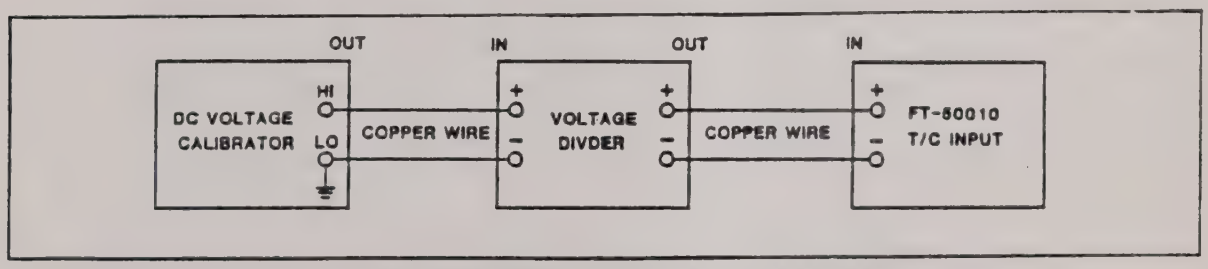

THERMOMETER A/D CALIBRATION

4) Set the calibrator to .001 V and voltage divider to +100:1 for a thermometer input of +10 uV. Note the resulting temperature display.

5) Reverse the polarity of the input and again observe the display. Adjust zero potentiometer, R31 until the two readings are equal except for polarity, and read approximately 1.0 °F.
6) Again source +10 uV. Adjust R14 for a display of 1.0. Reverse input polarity and verify a display of -1.0 ± 0.1 °F.

7) Set the calibrator (1.9V) and voltage divider (-100:1) for a thermometer input of -19.000 mV. Adjust -FS potentiometer, R30 for a display of -1900.0 exactly.

8) Source +19.000 mV. Verify a thermometer display of 1900.0 ± 2-1/2 counts.

9) Set the calibrator (9.9V) and voltage divider (+100:1) for a thermometer input of +99.000 mV. Verify a display of 9900 ± 1 count. Reverse input polarity and verify a display of -9900 ± 1 count.

10) Remove the jumper wire from TP9 and TP19.

7.9.2 Reference Junction Divider Calibration

CAUTION

Care should be taken in adjusting the dc calibrator output in the following steps. Excessive calibrator output can damage the reference junction circuitry.

1) Set the dc calibrator for an output of 0.0 volts. Use direct output from the calibrator.

2) Connect the (-) output of the calibrator to TP14 (on the T/C switch assembly). Connect the (+) output of the calibrator to TP13.

3) Place a short across the T/C+ and T/C- terminals on T/C #1 input assembly. Select that assembly as the input.

4) Place the select type T/C rotary switch to the K position.

5) Adjust the DC calibrator for an output of .57850 V. Adjust R5 for a display of exactly 25.0 °C or 77.0 °F.

6) Disconnect the leads from TP13 and TP14. Remove the short from the T/C input.

7.9.3 Thermocouple Input Module Calibration and Verification

This procedure assumes the thermometer a/d is already calibrated.

1) Construct an ambient temperature lag bath as follows:

a) Prepare a thermos type container by drilling two holes in its cap to accept the mercury thermometer and thermocouple wires, or use a standard laboratory cork.

b) Fill this container with room temperature water.

c) Replace the cap or cork and insert the thermocouple wires and thermometer as shown in the following figure, allowing the bath to stabilize for at least 30 minutes.

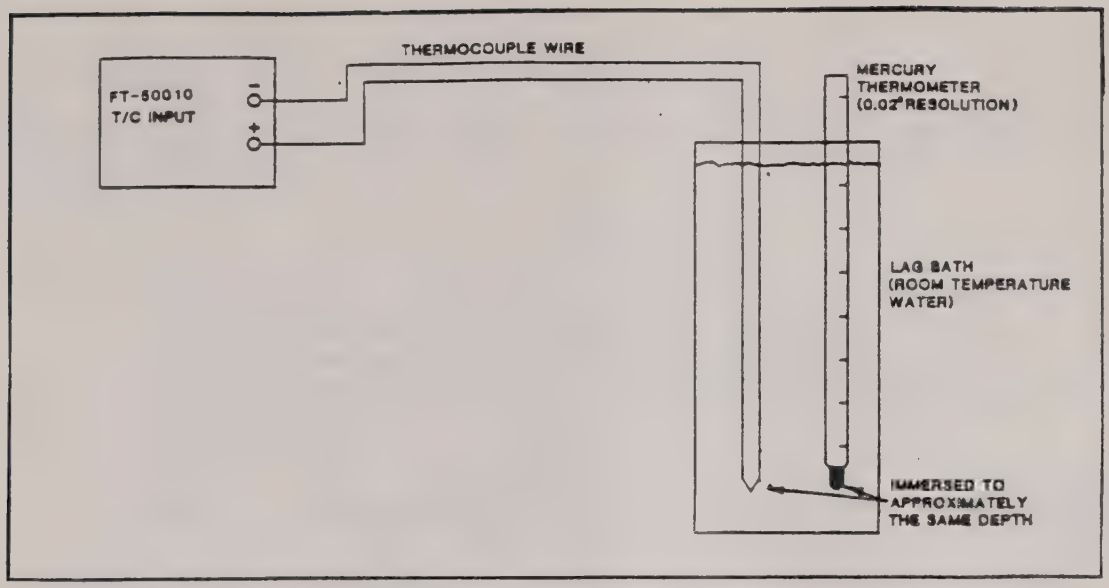

THERMOCOUPLE INPUT VERIFICATION / CALIBRATION

2) Connect a K-type thermocouple to one of the T/C (thermocouple) input assemblies. Immerse the thermocouple probe in a room temperature lag bath as shown in the previous figure.

3) Install the input assembly in the A21-50 and allow the equipment to stabilize for at least 5 minutes.

4) Set the type select rotary switch on the A21-50 to the K position. select the °C temperature scale.

5) Read the lag bath temperature using the mercury thermometer.

   a) When performing calibration, adjust R1 on the input assembly so the A21-50 temperature display agrees with the mercury thermometer reading.

   b) When performing verification, read the A21-50 temperature display and verify it agrees with the mercury thermometer reading within:
   - ± .2 °C if instrument has just been calibrated
   - ± .4 °C within 90 days of cal.
   - ± .5 °C within 1 year of cal.

6) Repeat steps 2) through 5) for the other thermocouple input assembly.

7.9.4 Reference Junction Resistor Selection

This section need be performed only if the range of R1 from the previous section is not enough to allow the instrument to be calibrated.

NOTE:

The following table lists values and part numbers that may be used to replace R3. These are low temperature coefficient metal film resistors. If these values are substituted with parts with a larger temperature coefficient, stability over time may suffer.

VALUE	JOHN FLUKE P/N	VALUE	JOHN FLUKE P/N
49.9 k	268821	110 k	234708
52.3 k	237248	124 k	288407
54.9 k	271353	140 k	289439
57.6 k	289116	162 k	375998
60.4 k	291419	191 k	375923
63.4 k	235382	237 k	288373
68.1 k	236828	309 k	235283
73.2 k	237222	332 k	289504
78.7 k	289058	464 k	271908
84.5 k	229492	562 k	235358
90.9 k	223537	1.05 M	260737
100 k	248807	OPEN	--

REFERENCE JUNCTION BIAS RESISTOR VALUES

1) Remove R3 from the T/C input assembly. Temporarily connect copper wire test lead to TP1 and TP2 on the T/C Input Assy. Connect the test leads to a resistor substitution box as shown in the following figure.

2) Connect a K-type thermocouple to the T/C input assembly and immerse the probe end into a room temperature lag bath as shown in the previous figure.

3) Adjust R1 on the input assembly to the center of its range. Install the input assembly in the A21-50 and allow the equipment to stabilize for at least 5 minutes.

4) Set the type select rotary switch on the A21-50 to the K position. Select the °C temperature scale.

5) Read the lag bath temperature using the mercury thermometer. Adjust the resistor substitution box to the value in the above table that yields a A21-50 temperature display that most nearly matches the lag bath temperature.

6) Disconnect the decade resistor from the T/C input assembly and replace it with a resistor of the value selected.

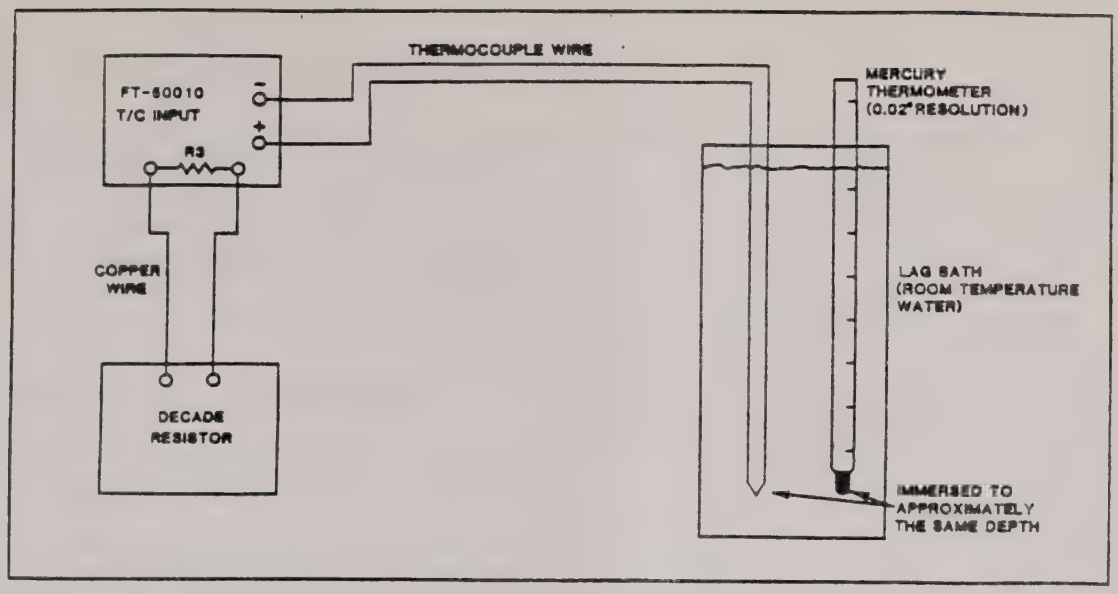

REFERENCE JUNCTION RESISTOR SELECTION

7) Reconnect the equipment as shown in the figure at step 1 of 7-13, and allow it to stabilize for at least 5 minutes.

8) Adjust R1 on the input assembly so that the A21-50 temperature display agrees with the mercury thermometer reading.

7.9.5 Calibration Output

The Calibration Output has no internal adjustments and hence requires no calibration.

7.10 CALIBRATION OUTPUT VERIFICATION

This procedure checks the range of the CALIBRATION OUTPUT part of the A21-50 temperature section.

1) Select T/C #2, Calibration Output, J-Type T/C, °F.

2) Connect the T/C #2 input to a 5-1/2 digit DVM, set to Volts DC, 200 mV.

3) Adjust the Cal/Out Fine and Coarse controls fully counter-clockwise. Verify a UUT temperature display of "-0.L °F". Verify a DVM reading of -10 mV or more negative.

4) Adjust the Cal/Out Fine and Coarse controls for a UUT temperature display of "32.0°F". Select °C scale. Verify a UUT temperature display of "0.0°C" ± .2 °C.

5) Adjust Cal/Out Fine and Coarse controls fully clockwise. Verify a DVM reading ≥ +90 mV. Verify a UUT temperature display of "0.L °C".

7.11 RELAY TIMER CALIBRATION

The following procedure should be used for calibrating the relay timer section of the A21-50.

1) In the relay timer section of the A21-50, connect a frequency counter between testpoints TP301 and TP302.

2) Adjust C302 for a counter reading of 100.000 msec exactly.

Return to paragraph 7.1.3 Step 6 on page 16, after tightening screws on the display board that hold the ac shield.

7.12 RELAY TIMER VERIFICATION

Use the following procedure to verify proper operation of the A21-50 relay timer section.

1) Plug the Time Delay Relay test box into the relay jack (J25) in the A21-50 relay timer section.

2) Delay Pick Up Mode

a) In the Time Delay Relay Test box, select the DELAY PICK UP mode.

b) Select the DELAY PICK UP mode in the relay timer section.

c) Depress the ARM pushbutton.

d) Depress the START pushbutton. Verify that the timer counts to 10.0 ± .2 sec. Release ARM and START pushbuttons.

3) Delay Drop Out Mode

a) In the Time Delay Relay Test box, select the DELAY DROP OUT mode.

b) Select the DELAY DROP OUT mode in the relay timer section.

c) Depress the ARM switch.

d) Depress the START pushbutton. Verify that the timer counts to 10.0 ± .2 sec.

e) Release the ARM and START pushbuttons. Verify that the timer reads "000.0" .

7.13 CHASSIS ASSEMBLY

1) Install the instrument completely in its case. Clean off any lint from the face of the LCD lens (on the front panel) so that the displays are clean when the front panel is closed.

8.0 RE-VERIFICATION

This is the last part of the procedure. At this point the unit under test has already been verified outside of the carrying case. Having been installed in the case at step 7.12, the unit is checked here to make sure its functioning and specifications have not changed due to the added shielding of the case or due to any new mechanical stress encountered.

During this test look for sticky pushbuttons, rotary controls that do not turn freely, loose knobs, scratches, lint under the LCD lens, or any other defect.

Perform the following procedures which are found in Section 7:

MULTIMETER
DC Volts Verification
AC Volts Verification
Resistance/Conductance Verification
DC Current Verification
AC Current Verification

FREQUENCY COUNTER VERIFICATION

FREQUENCY SOURCE VERIFICATION

DC VOLTAGE SOURCE VERIFICATION

CURRENT SOURCE VERIFICATION

THERMOCOUPLE INPUT VERIFICATION

CALIBRATOR OUTPUT VERIFICATION

RELAY TIMER VERIFICATION

Final test of the A21-50 is now complete.

9.0 TROUBLESHOOTING

This section provides some useful troubleshooting information for the power supply section of the A21-50.

9.1 The power supply has four transformers, all with a common primary ground. There are a total of 10 secondary grounds. If a group of circuits driven by a single transformer all fail, the fault is probably located in the primary drive circuit for that transformer. (Each transformer has its own primary drive circuit.)

TRANSFORMER	GROUND	CIRCUITRY DRIVEN BY TRANSFORMER
T1	2,3,4	Thermometer Frequency Source #1 LCD 1, for Thermometer
T2	5,6,7	Frequency Source #2 LCD 2, for Audio Frequency
T3	8,9	No. 1 DC Volts Out No. 2 DC Volts Out
T4	10,11	DC mA Out Multimeter LCD 3, for Multimeter
(none)	1	Relay Timer LCD 4, for Relay Timer

NOTE: Ground 1 is on primary side of all transformers. Grounds 2-10 are on secondary sides.